BRUNNER FIREPLACES



Architektur 45/101

lifting door (easy-lift)

State: 2018-01-23



BRUNNER®
made in germany.

Dimension sheets - Architektur 45/101 lifting door (easy-lift)

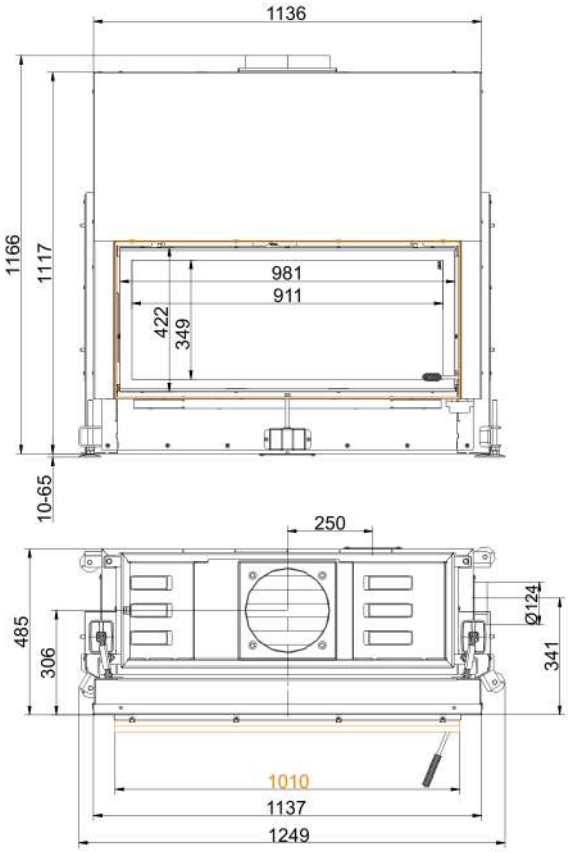

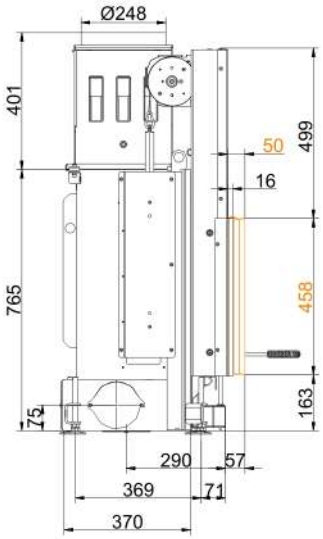

… with mounting frame 50 mm

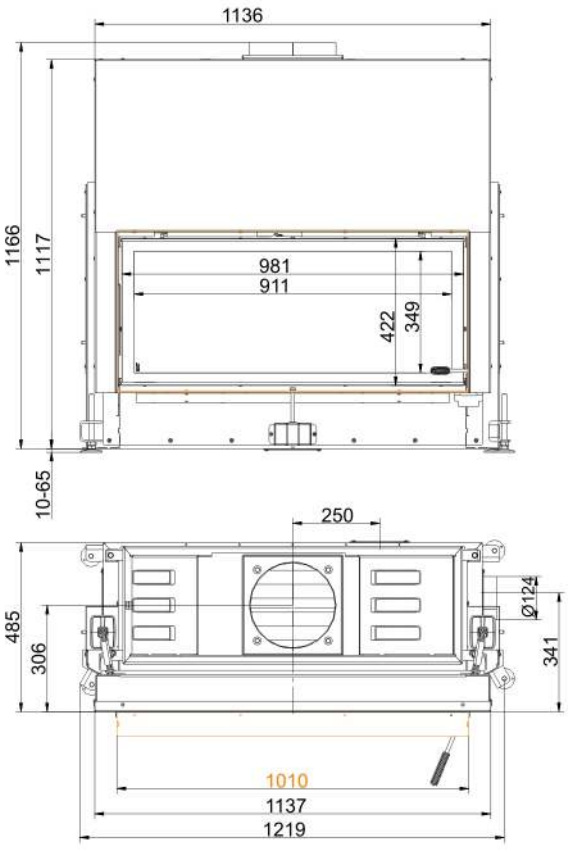

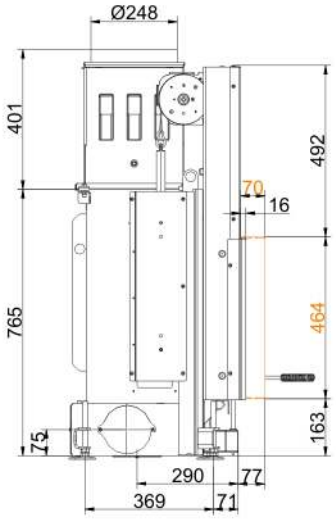

… with mounting frame 70 mm

State: 2018-01-23

Dimension sheets - Architektur 45/101 lifting door (easy-lift)

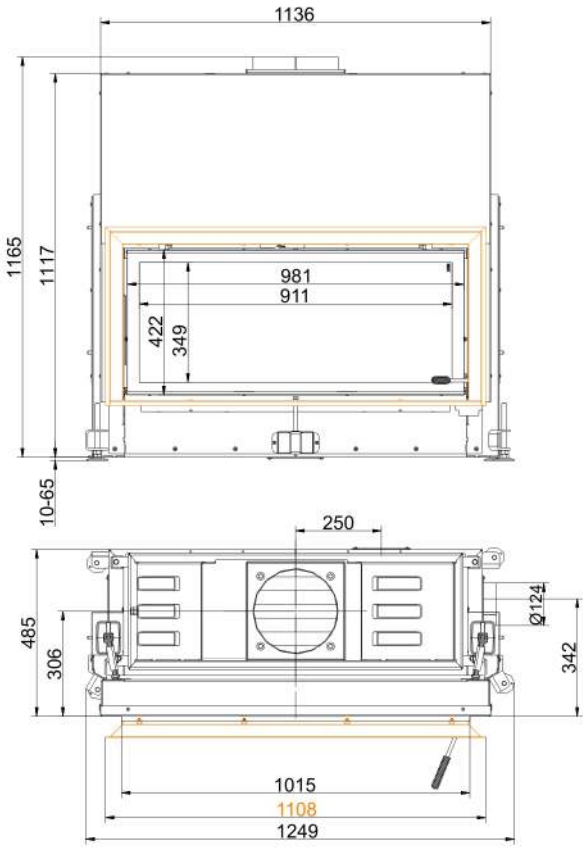

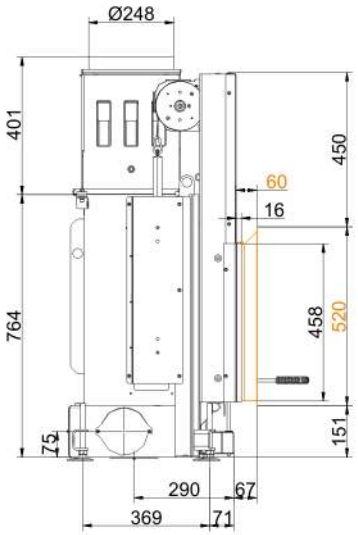

… with door frame

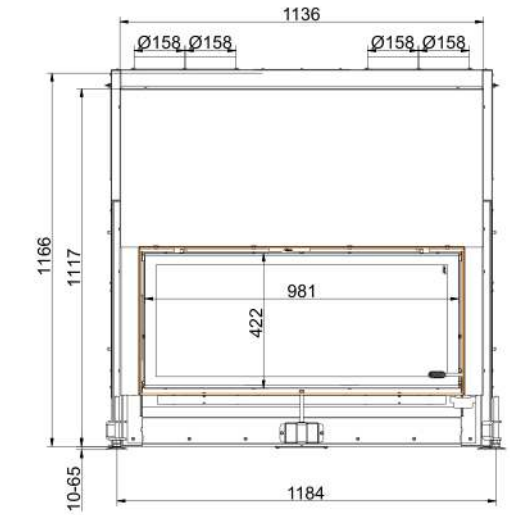

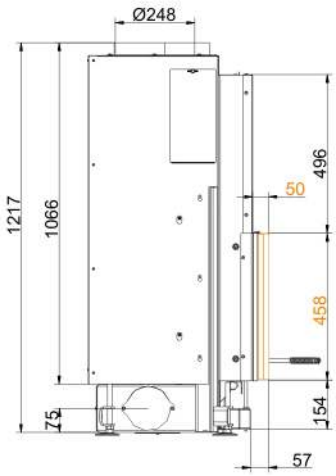

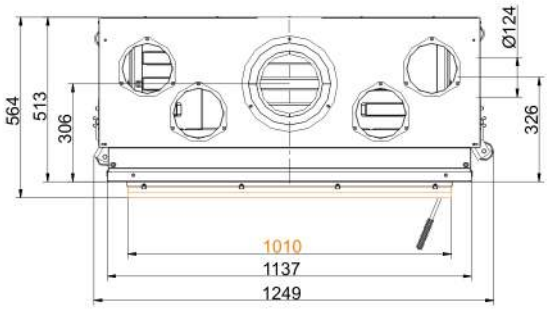

… with moutiting frame 50 mm and convection cladding

State: 2018-01-23

Dimension sheets - Architektur 45/101 lifting door (easy-lift)

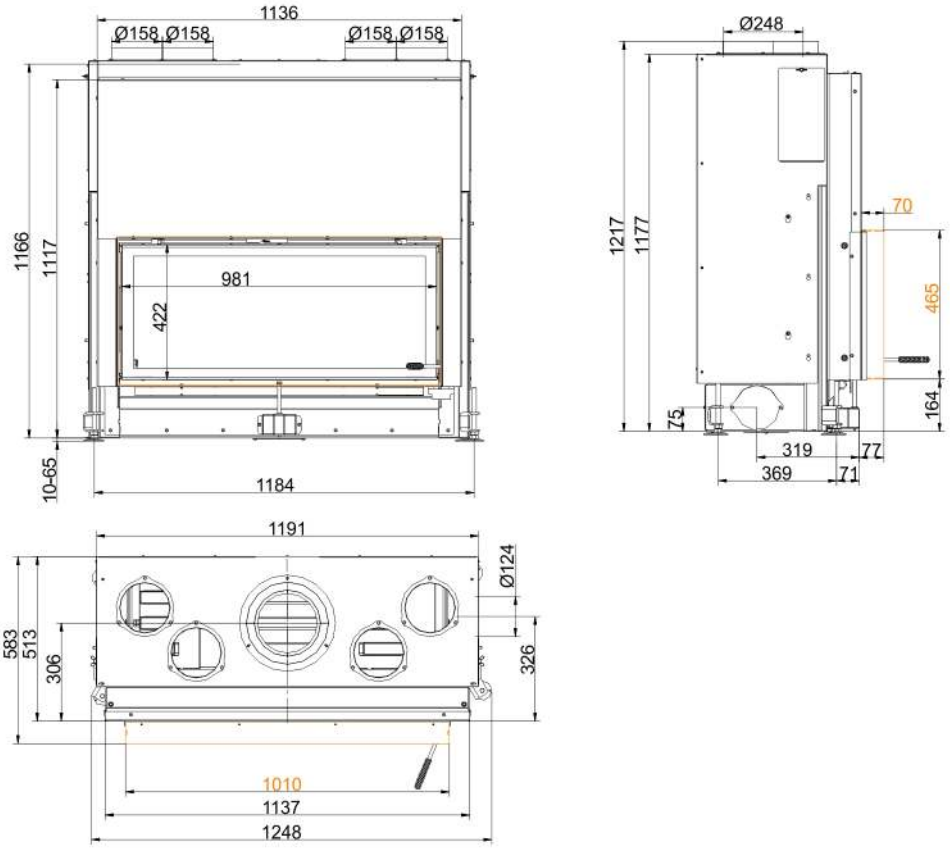

… with moutiting frame70 mm and convection cladding

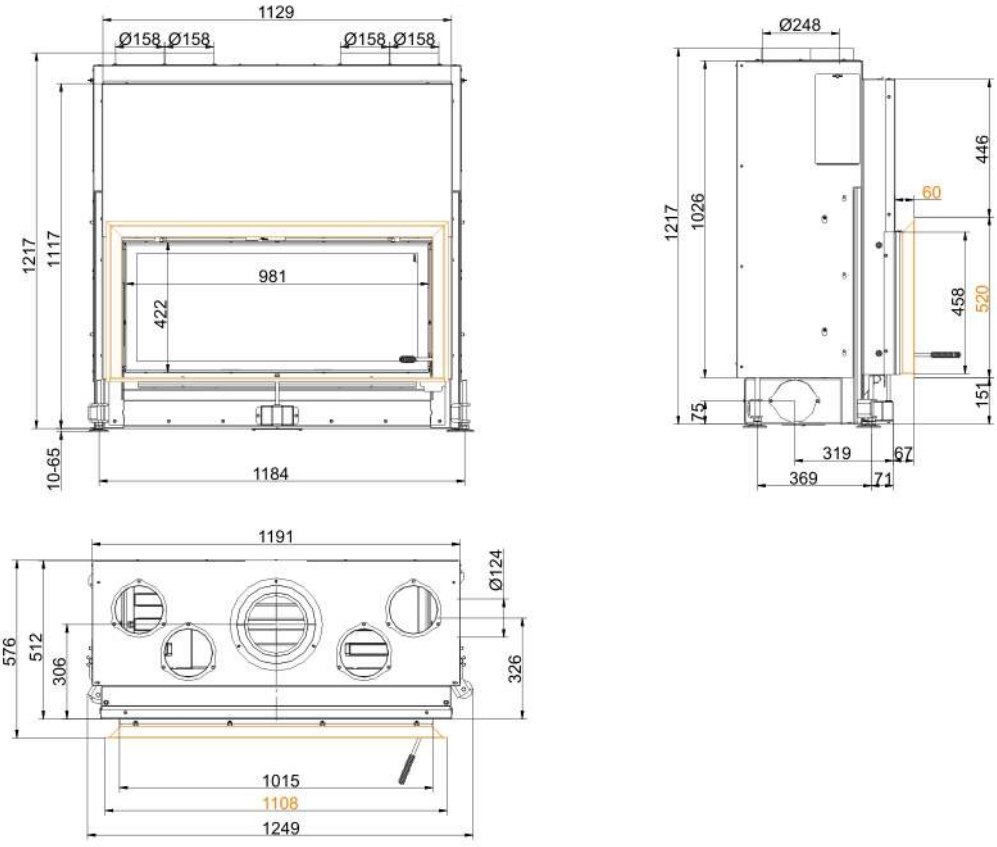

… with frame and convection cladding

State: 2018-01-23

Dimension sheets - Architektur 45/101 lifting door (easy-lift)

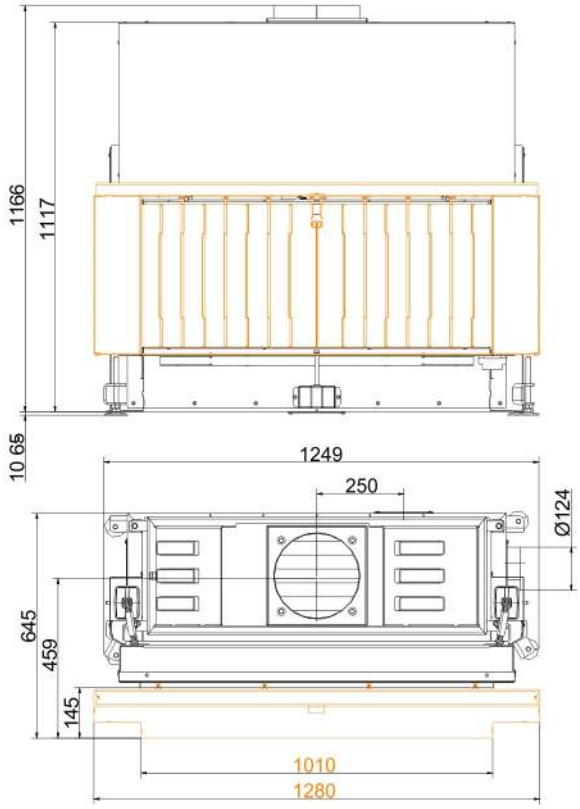

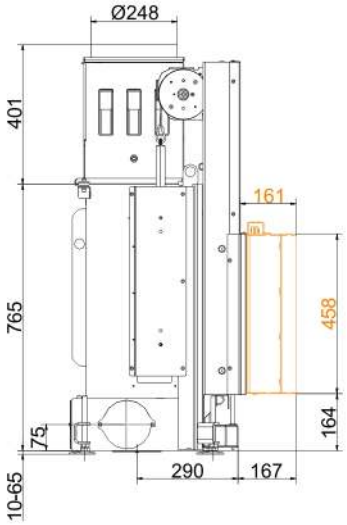

… with heatSTOP®

We suggest for CAD planing Palette CAD. Permanent updated drawings: www.brunner.de
Frames / front versions are marked colored.

Planning and installation - Architektur 45/101 lifting door (easy-lift)

Tested according to		EN 13229 W	EN 13229 W
Values measured at		Rated capacity	Open
Suitable for all construction types according to rules		OK	OK
EEI		105.8	105.8
Data for functional demonstration			
Rated heat power	kW	14	-
Fire wood volume	kg/h	4.3	4.3
Combustion performance	kW	18	18
Flue gas mass flow	g/s	16	80
Flue gas temperature after:			
attached steel smoke hood	°C	220	130
Necessary supply pressure	Pa	12	6
Combustion air consumption	m^3/h	40	210
Combustion air connection Ø	mm	125	-
Heat distribution			
Insert / heat accumulator	%	60 / -	-
Glass pane (single / double)	%	40 / -	-
Cross-section of gratings [1]			
Supply air	cm^2	900 / 100 / -	-
Warm air	cm^2	900 / 100 / -	-
Minimal oven surface for closed construction type			
Heat dissipating surface	m^2	7.2	-
Min. distances of fireplace without / with convection casing			
to insulation layer	cm	8 / 3	8 / 3
to mounting floor	cm	2 / 2	2 / 2
Thermal insulation without / with air gratings [2]			
Mounting wall	cm	18 / 14	18 / 14
Floor	cm	4 / 2	4 / 2
Ceiling	cm	25 / 18	25 / 18
Brick lining for combustible wall	cm	10	10
Weight			
Fireplace / combustion chamber	kg	200 / 80	
Meets requirement/limit values for:			
Germany/ Austria / Suisse / Norway		1.BImSchV (Stufe 2) / 15a BVG (2015) / LRV / NS 3059	

1) for fireplace inserts / flue gas pipe / metallic reheating surface
2) Values determined with upper air sections; stove cladding is heat emitting.

Ulrich Brunner GmbH
Zellhuber Ring 17 - 18
D-84307 Eggenfeldern
Telefonat: +49 / (0)87 21 / 7 71-0
Telefax: +49 / (0)87 21 / 7 71-100
info@brunner.de | www.brunner.de

BRUNNER®
made in germany.