NORTHERN LIGHTS SETS

1516601
1516602

1

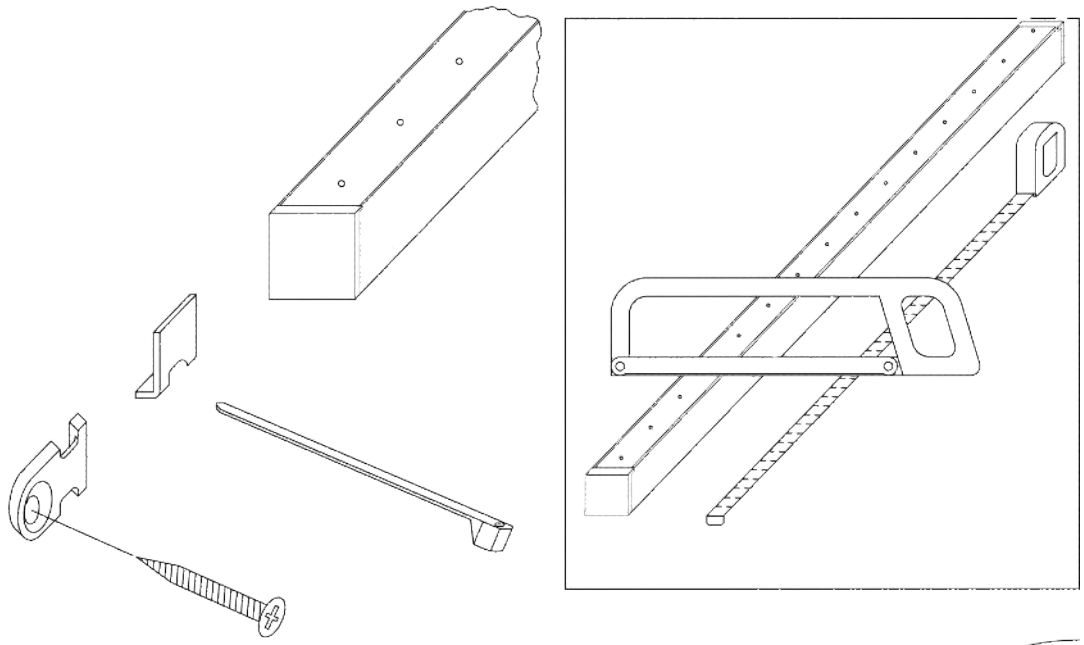

2

3

4

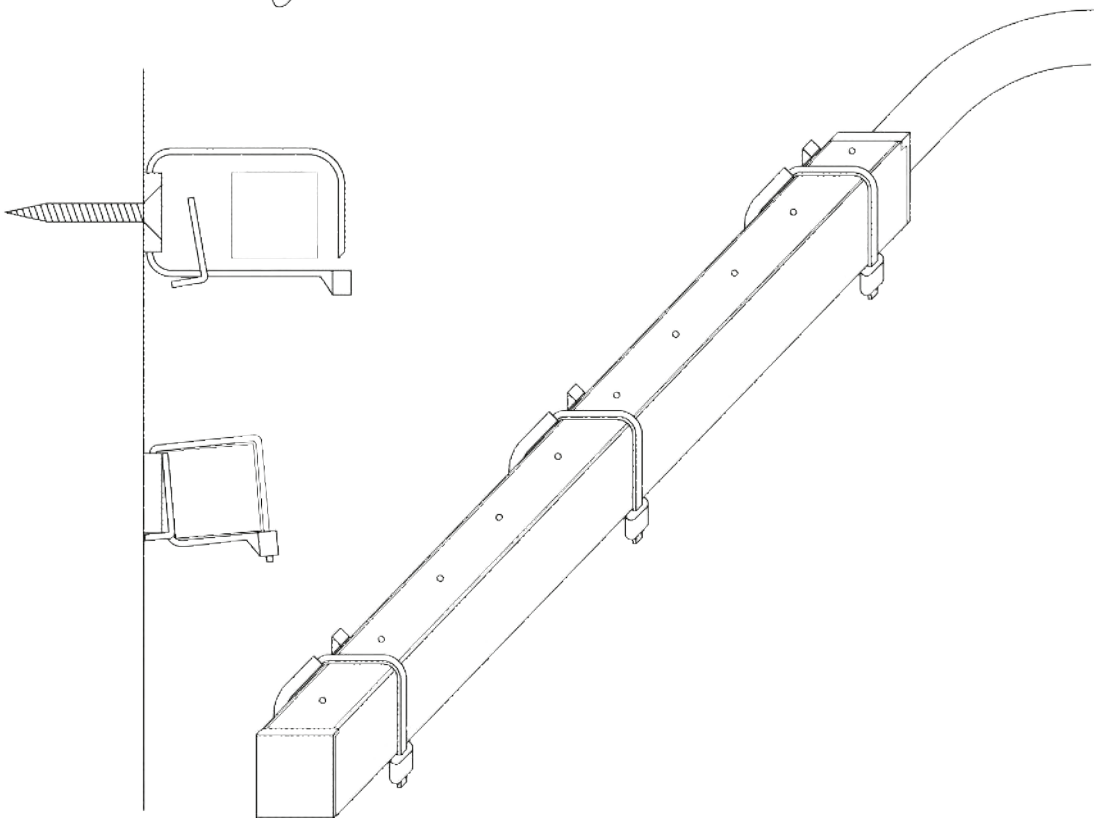

Cariitti Oy
www.cariitti.com

Subject to change.

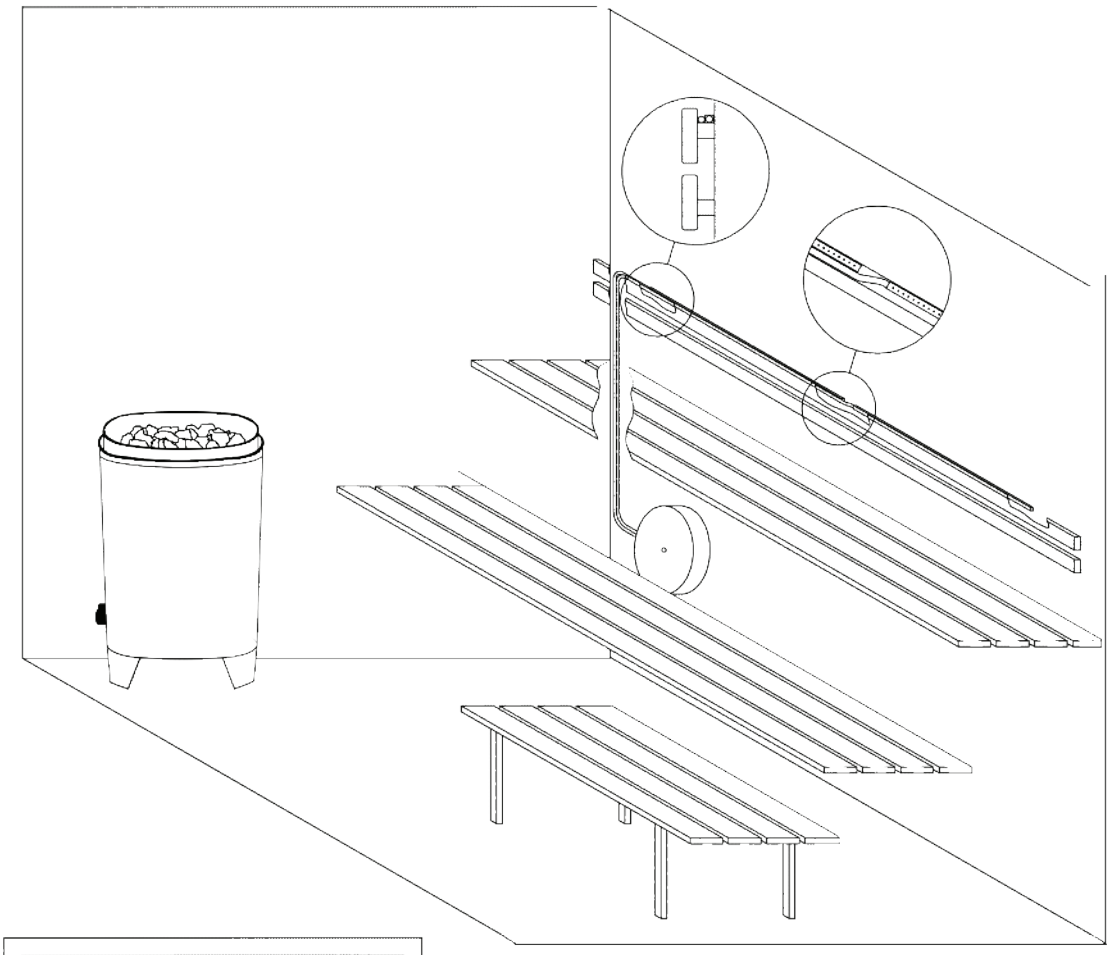

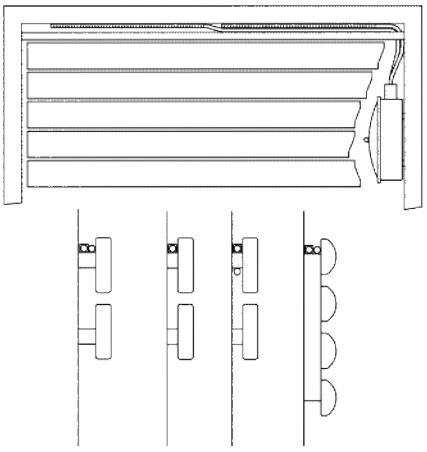

MAX + 80 ˚C

Cariitti Oy
www.cariitti.com

Subject to change.