Outdoor gas heater UMBRELLA - steel white

UMBRELLA/B/G30/37MBAR/S/ZESTAW

Price:

€352.80

~~€467,29~~



EAN:
5902539503333

UMBRELLA is a modern outdoor gas heater which will extend your summer time. Due to its presence, wonderful moments in the garden or on the terrace in the company of family and friends do not have to end with the arrival of colder evenings.

Shipping on pallet
transfer - zł106.00
COD - zł111.00
Implementation within
14 days

Technical Specifications

Rated output (kW)	12,0
Range of heating power (kW)	3.9 - 12.0
Fuel type	propan butan
Destination country	pl
Weight (kg)	46,0
Glazing type	lateral
Material	steel, glass
Width (cm)	50,10
Height (cm)	216,30
Depth (cm)	50,10

Colour	white

Features

UMBRELLA (registered trade mark design) is a modern gas heater which will extend Your summer time. Due to its presence, wonderful moments in the garden or on the terrace in the company of family and friends do not have to end with the arrival of colder evenings. The appliance will guarantee You a **comfortable temperature and unique design**, and **due to the impressive flame** illuminating the surrounding area it will create a unique atmosphere. Warmth, mood, comfort and safety are the key features of UMBRELLA.

MODERN DESIGN

The UMBRELLA heater is a unique decoration on your home terrace or garden. It can be successfully used in the restaurant and hotel industry as a complement to the dining and recreation space.

The **elegant design** of the heater is stylized and constitutes to an interesting, eye-catching decoration. Attractive appearance and pleasant warmth will make the gardens and terraces in homes or restaurants always full of guests on both spring, summer and autumn evenings.

COMFORTABLE USAGE

Firing up of the heater requires a few seconds. It is extremely comfortable and intuitive.

The gas regulator and the hose for connecting the gas cylinder **are installed** in the heater.

The appliance can work constantly at full power **even up to 17 hours**. It is powered by a 11 kg cylinder. It is suitable to both propane-butane gas and pure propane. We recommend usage of the pure propane cylinders.

The UMBRELLA heater does not emit any sounds or smell. Its operation also does not influence the air circulation, which is especially important for allergic users.

SAFETY AT THE HIGHEST LEVEL

The UMBRELLA heater is powered by liquid gas from a cylinder hidden in the appliance casing. The flames are enclosed in a special chamber that protects the user from direct contact with fire.

The design and structure of the heater guarantees protection of the burning fire from the wind. The UMBRELLA heater is equipped with a special **anti-roll valve**, which in the case of the appliance falling over automatically cuts off the gas supply to the controller, extinguishing the flame at the same time.

The heater is equipped with a completely safe, manual gas control system which protects against uncontrolled fuel leakage. Additionally, the appliances is equipped with a **thermocouple sensor** which, if the control burner flame is blown off, shuts off the gas supply to the burner.

Technical drawing

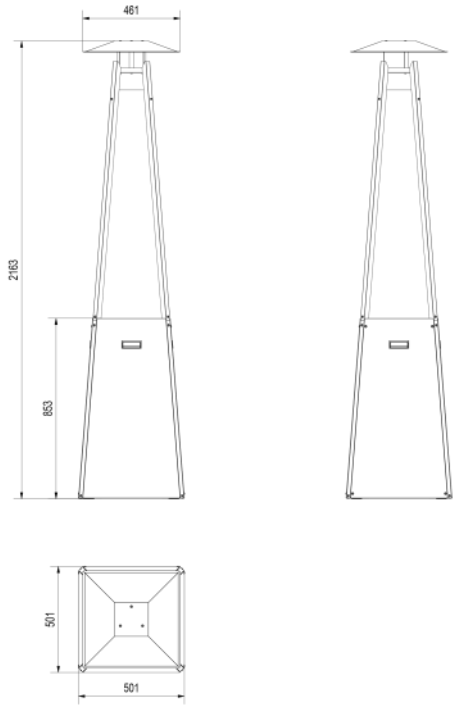

Additional options



Ceramic wood decoration elements for gas cartridges — €151.87



Decorative stones FIRE GLASS - black crystal — €22.66

Decorative glass stones create an interesting and aesthetic finish in the biofireplaces, gas fireplaces and gas heaters. Weight: 1 kg.



UMBRELLA gas heater cover black (white logo) — €70.09

Composition: surface - 100% polyester; PVC primer. Weight: 490 g/m². Waterproof. Colour: black, white logo.



UMBRELLA gas heater cover black (logo black) €75.23

Composition: surface - 100% polyester; PVC primer. Weight: 490 g/m². Waterproof. Colour: black, logo black.



UMBRELLA gas heater cover white (black logo) €123.83

Composition: surface - 100% polyester; PVC primer. Weight: 490 g/m². Waterproof. Colour: white, black logo.



Decorative stones FIRE GLASS - transparent crystal €14.25

Decorative glass stones create an interesting and aesthetic finish in the biofireplaces, gas fireplaces and gas heaters. Weight: 1 kg.

Warranty

All the products available at www.kratki.com are brand new, free from any physical or legal defects. The Producer grants a 2-year warranty from the moment of purchase of the gas heater for its reliable operation. The automatic gas steering system is covered with a 2-year warranty from the moment of the purchase of the device. The warranty shall not cover the glazing of the device. The application of the gas heater, the method and conditions of use must correspond with the manual.

Return

A Customer being a Consumer, who has concluded the Sales Contract may rescind thereof within a period of 14 days without giving any reasons. The time limits run for the rescission of the Sales Contract shall commence at the time of acquiring the Goods by the Customer or a third party of their choice, other, however, than a carrier. The representations may be submitted in a form whose template has been published by the Seller at the Online Shop Website.