ECKA **51/51/51h**

Technical data
Version **01/2017**

OPERATION WHEN DIRECTLY CONNECTED TO CHIMNEY	Cupola	Hot air exchanger
Tested according to	EN 13229	EN 13229
Nominal heat power	7 kW	10 kW
Efficiency	> 80 %	> 80 %
Consumption of wood	2,2 kg/h	3 kg/h
Mass flow of flue gas	6,4 g/s	9,6 g/s
Average flue gas temperature on the output	254 °C	269 °C
Heat distribution		
fireplace insert	64–75 %	64–75 %
door glass (single / double)	36 / 25 %	36 / 25 %
Required chimney pressure	12 Pa	12 Pa
Required amount of combustion air	30 m^3/h	35 m^3/h
Minimum supply air grating cross-section	650 cm^2	950 cm^2
Minimum outgoing air grating cross-section	800 cm^2	1 150 cm^2

OPERATION WITH CONNECTED ACCUMULATION MASS	Cupola	Adaptor
Load of wood	5 kg	–
Total heat output of the burning chamber	19 kW	–
Mass flow of flue gas	15 g/s	–
Average flue gas temperature		
on the output [1]	394 °C	–
past 3,2 m of ceramic accumulation system KMS 300 [2]	178 °C	–
past 5 pcs of accumulation rings KAM + termination ring	–	–
Heat distribution		
fireplace insert	36 %	–
door glass (single / double)	36 / 25 %	–
adjoining accumulation mass	29–39 %	–
Required chimney pressure	12 Pa	12 Pa
Minimum radiant area [3]	ca. 4,5 m^2	ca. 4,5 m^2
Required amount of combustion air	50 m^3/h	50 m^3/h

GENERAL TECHNICAL INFORMATION	
Combustion air connection	Ø 125 mm
Total weight / lining weight	ca. 261 / 67 kg
Use in non-ventilated accumulation builds according to craft rules	suitable
Meets values	BImSchV (Stufe2), 15a BVG

1) The Hoxter products are available in the Austrian stove-calculation program for evaluation of firebrick accumulation systems.
2) Only a sample calculation! For accurate results is evaluation of each system in the KMS-calculation program from the Ortner company necessary.
3) Depends on accumulation period and material characteristics and its thickness. Calculated with heat emission of the radiant area ca. 500 W/m^2.hr

Hoxter gmbh I Hersbrucker Straße 23 I 912 44 Reichenschwand I Germany I info@hoxter.de I +49 (0)9151 8659 163
Hoxter a.s. I Mlynska 326/13 I 602 00 Brno I Czech Republic I info@hoxter.eu I +420 518 777 701

ECKA **51/51/51h**

Technical data
Version **01/2017**

WITH CUPOLA

M 1 : 10

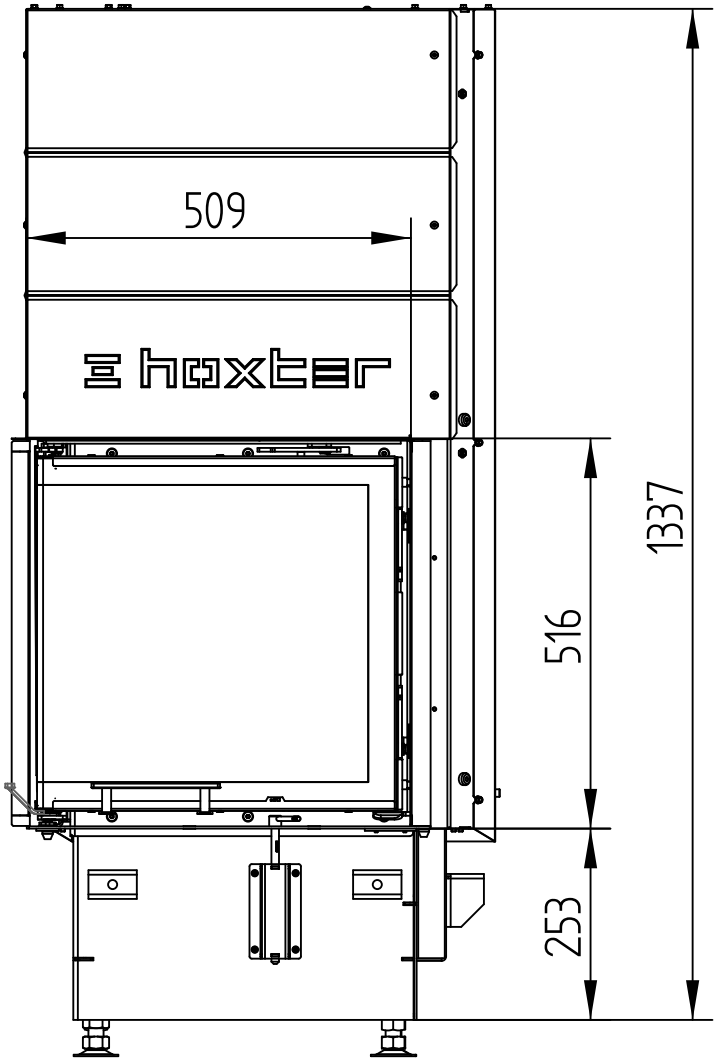

ECKA **51/51/51h**

Technical data
Version **01/2017**

WITH CUPOLA

M 1 : 10

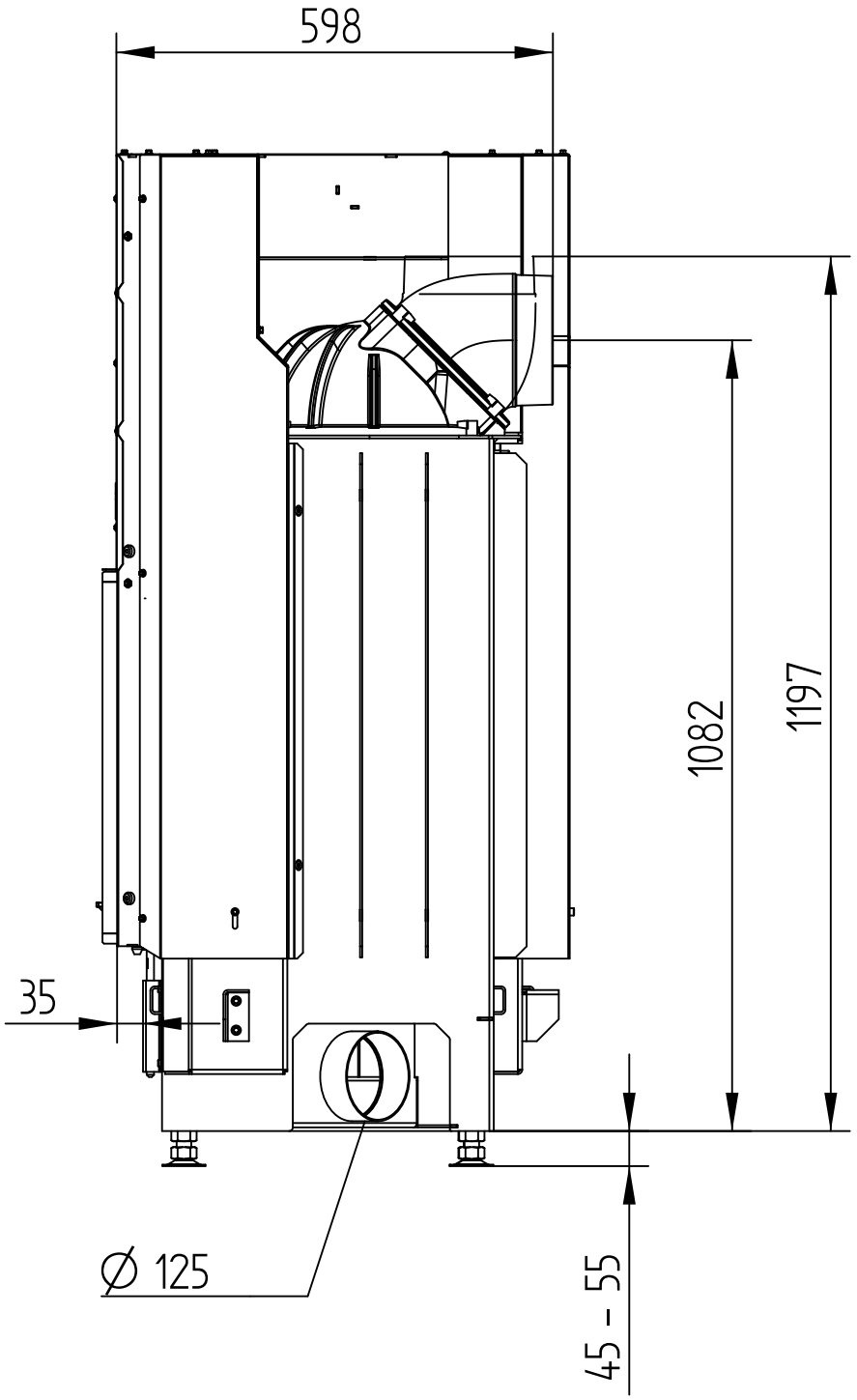

ECKA **51/51/51h**

Technical data
Version **01/2017**

WITH CUPOLA

M 1 : 10

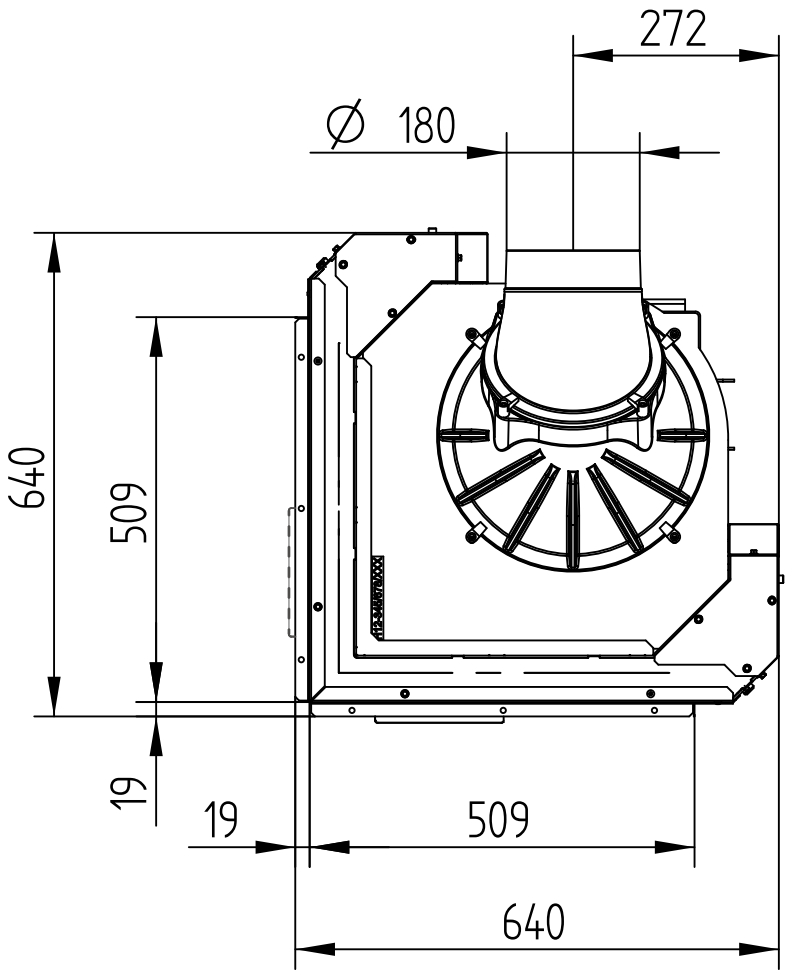

ECKA **51/51/51h**

Technical data
Version **01/2017**

WITH ADAPTOR

M 1 : 10

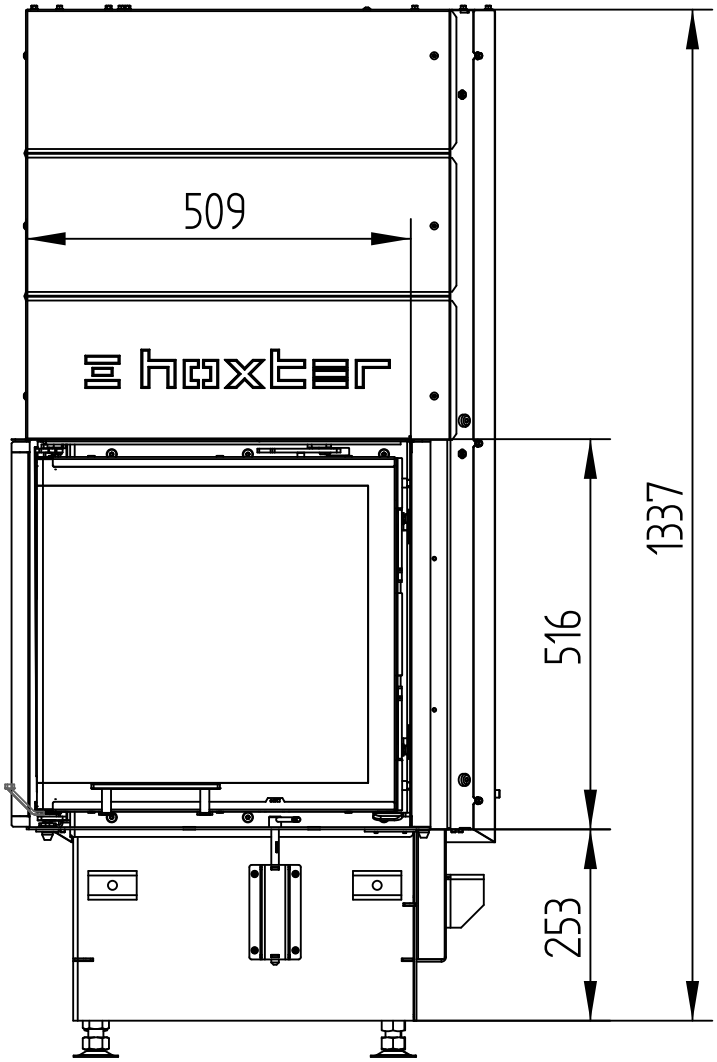

ECKA **51/51/51h**

Technical data
Version **01/2017**

WITH ADAPTOR

M 1 : 10

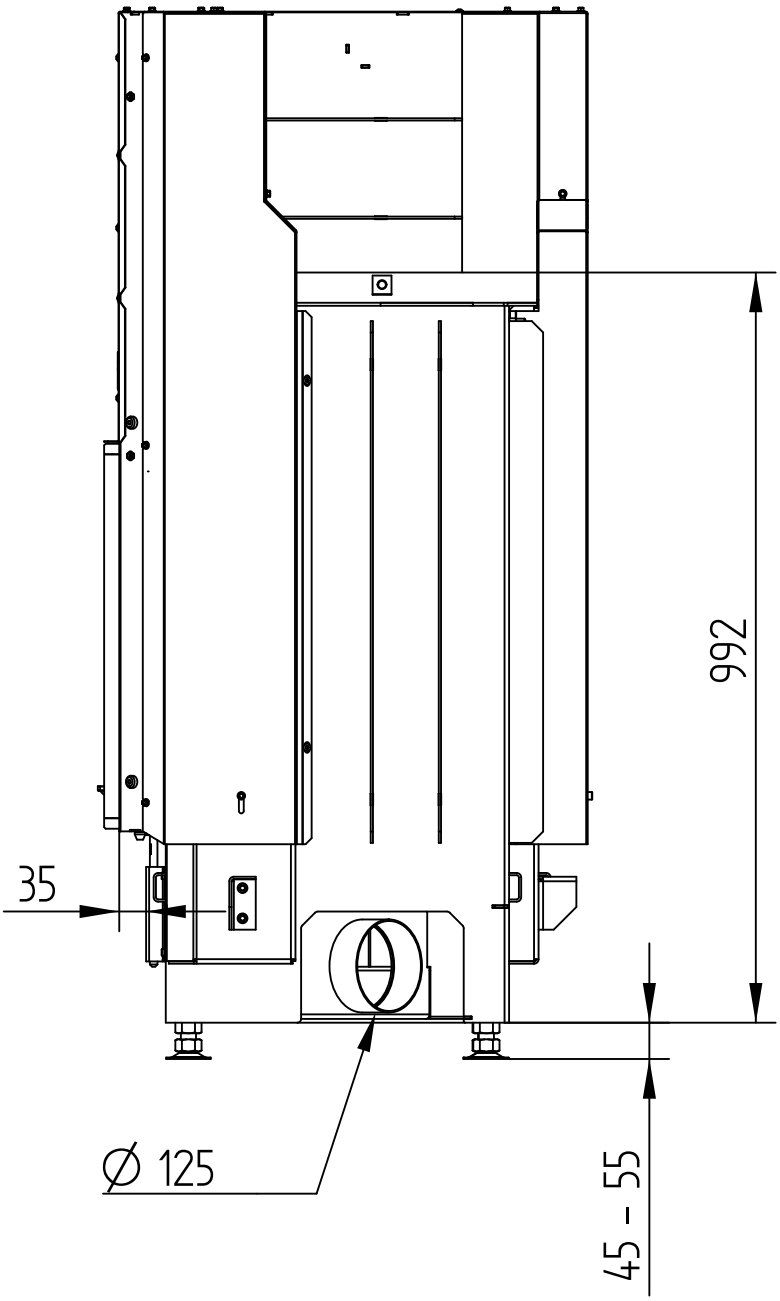

ECKA **51/51/51h**

Technical data
Version **01/2017**

WITH ADAPTOR

M 1 : 10

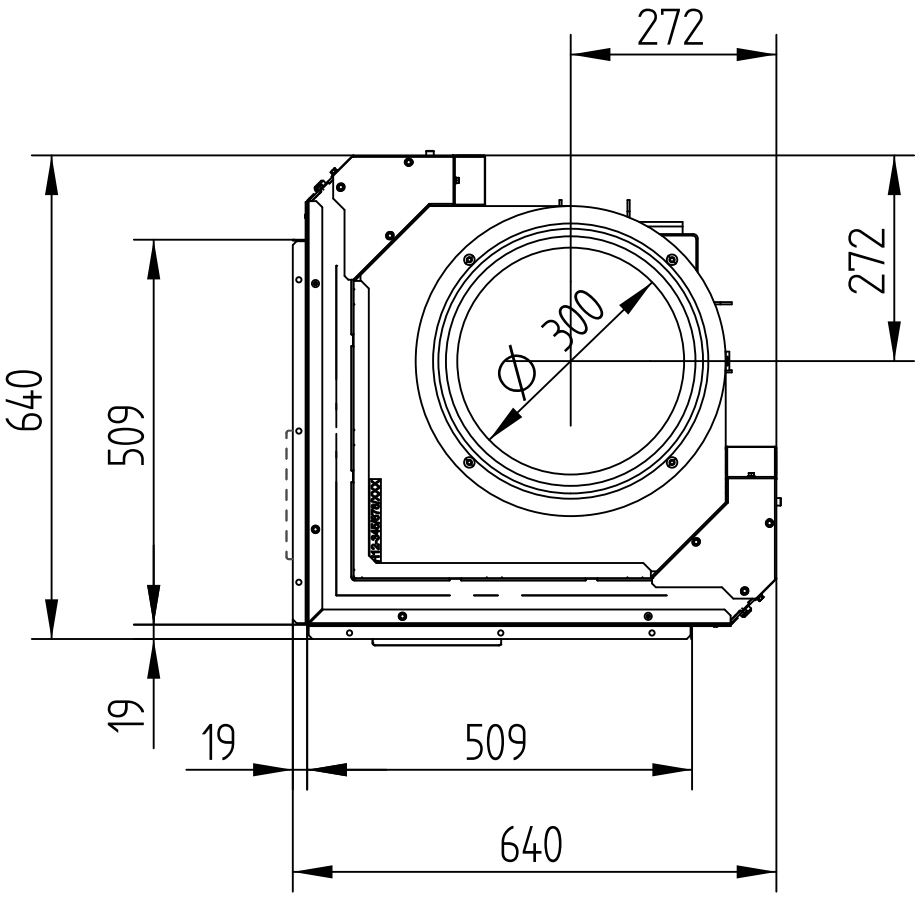

ECKA **51/51/51h**

Technical data
Version **01/2017**

WITH HOT AIR EXCHANGER

M 1 : 10

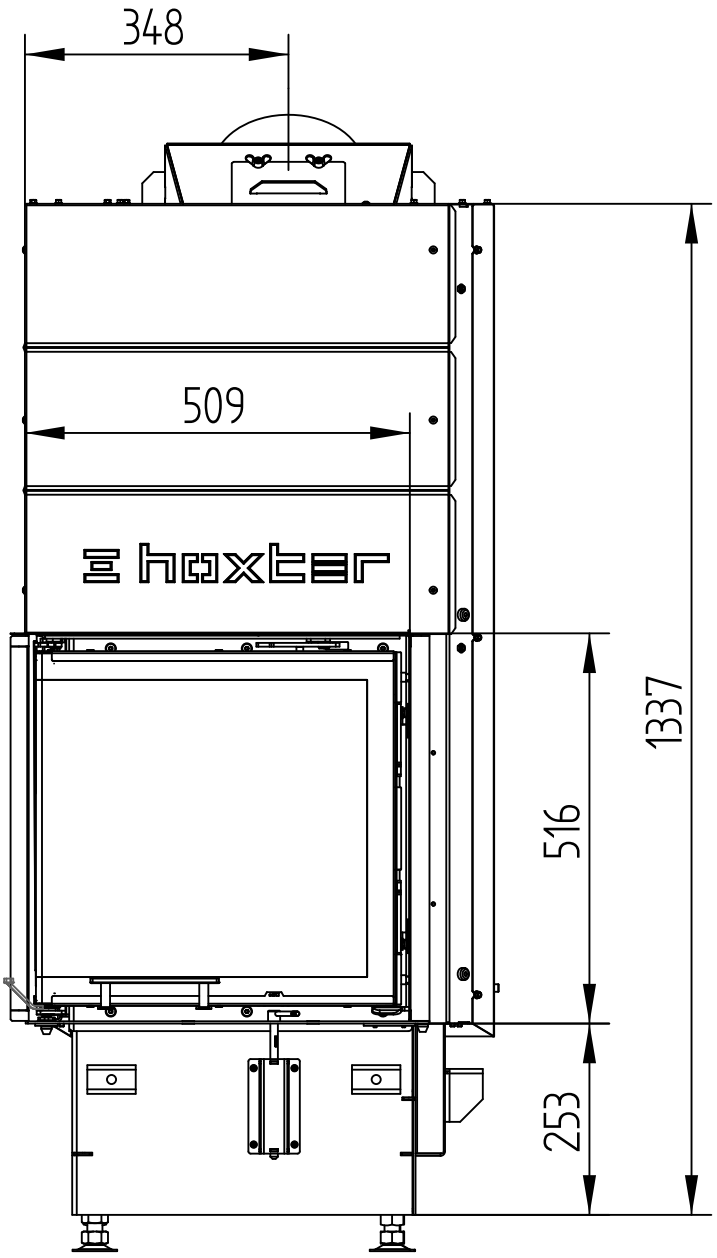

Hoxter gmbh I Hersbrucker Straße 23 I 912 44 Reichenschwand I Germany I info@hoxter.de I +49 (0)9151 8659 163
Hoxter a.s. I Mlynska 326/13 I 602 00 Brno I Czech Republic I info@hoxter.eu I +420 518 777 701

ECKA **51/51/51h**

Technical data
Version **01/2017**

WITH HOT AIR EXCHANGER

M 1 : 10

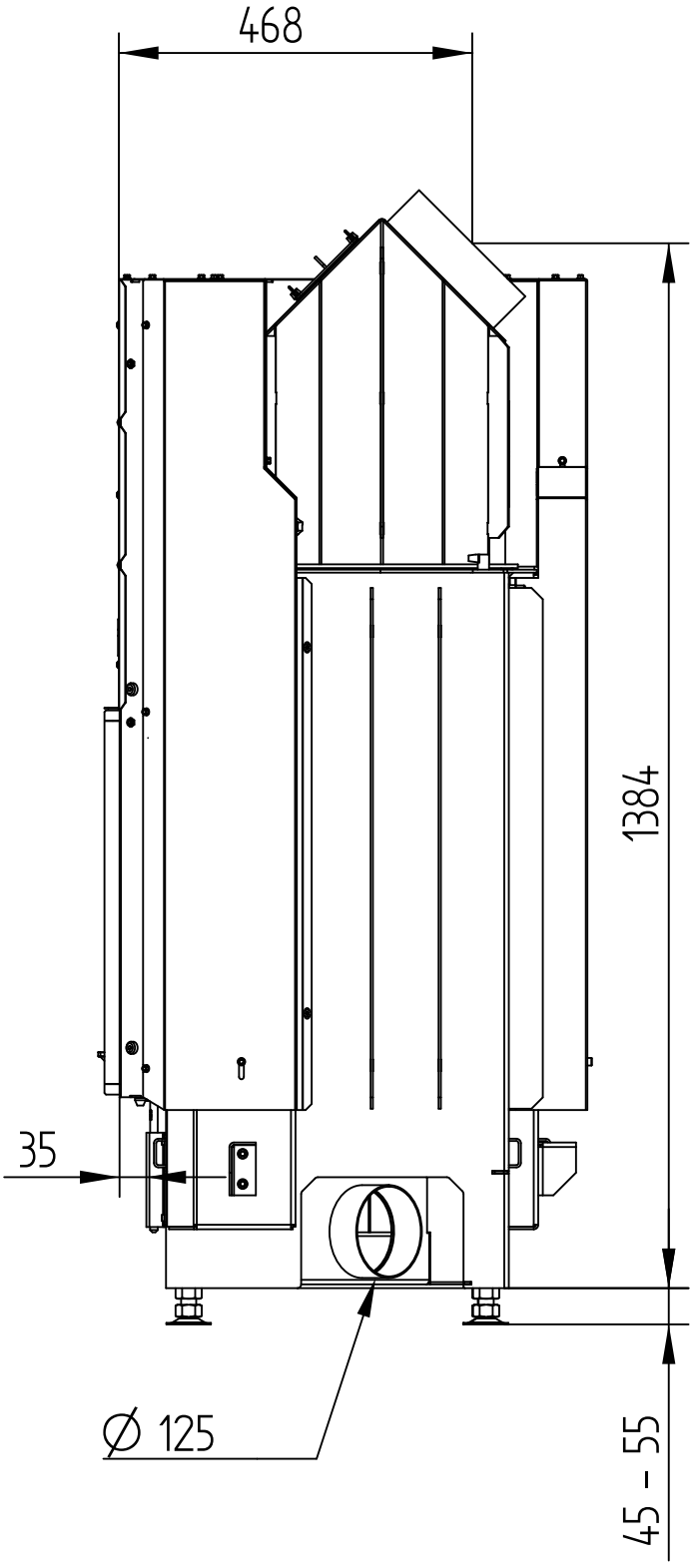

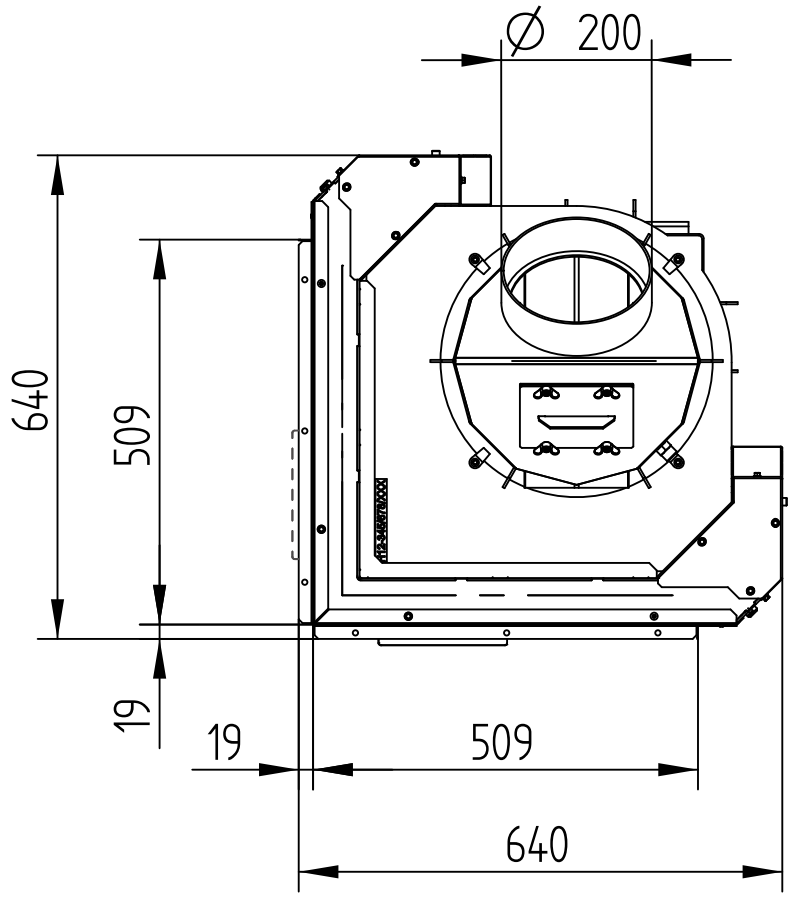
Ø 200
640
509
19
19
509
640

ECKA **51/51/51h**

WITH HOT AIR EXCHANGER VERTICAL

Technical data
Version **01/2017**

M 1 : 10

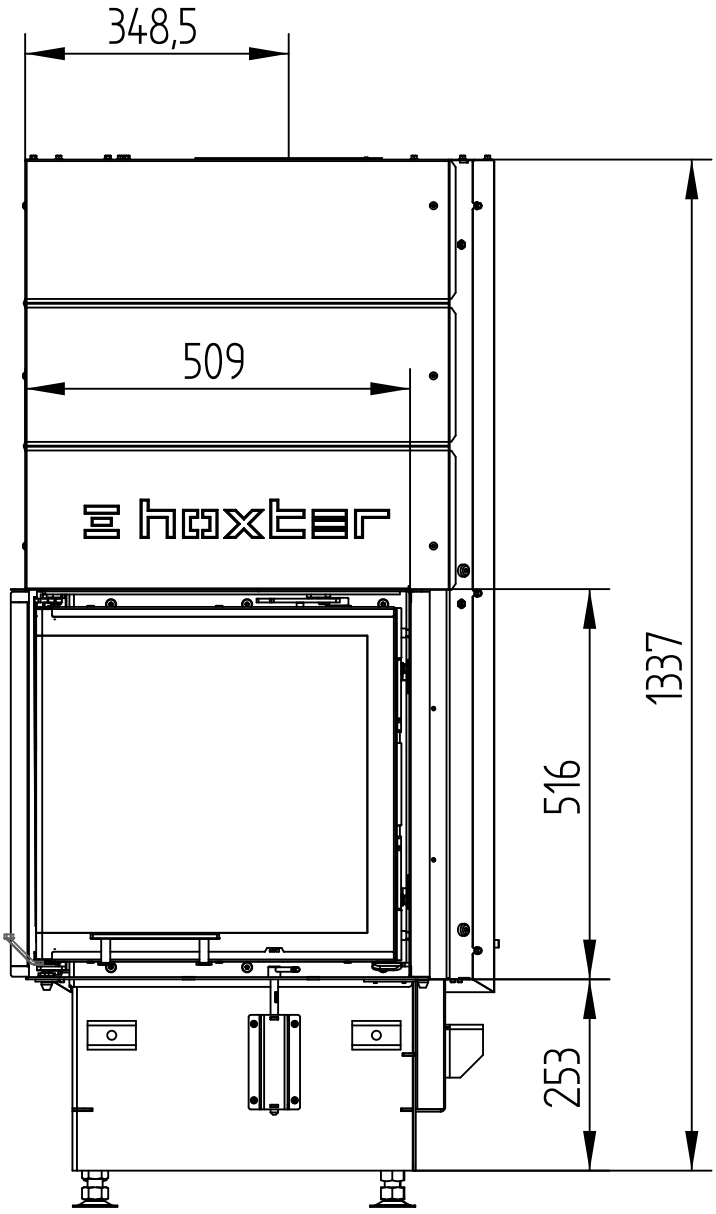

ECKA **51/51/51h**

Technical data
Version **01/2017**

WITH HOT AIR EXCHANGER VERTICAL

M 1 : 10

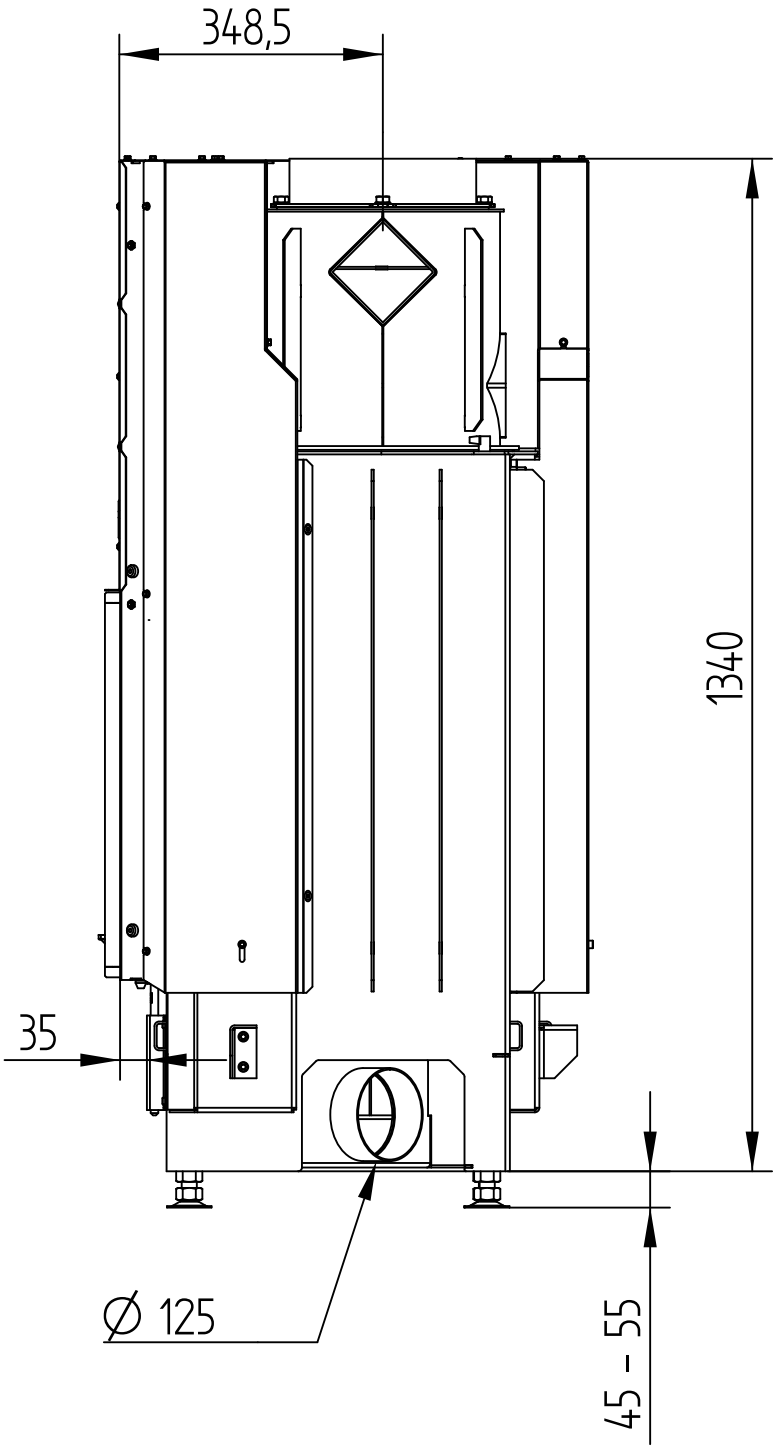

Hoxter gmbh I Hersbrucker Straße 23 I 912 44 Reichenschwand I Germany I info@hoxter.de I +49 (0)9151 8659 163
Hoxter a.s. I Mlynska 326/13 I 602 00 Brno I Czech Republic I info@hoxter.eu I +420 518 777 701

ECKA **51/51/51h**

WITH HOT AIR EXCHANGER VERTICAL

Technical data
Version **01/2017**

M 1 : 10

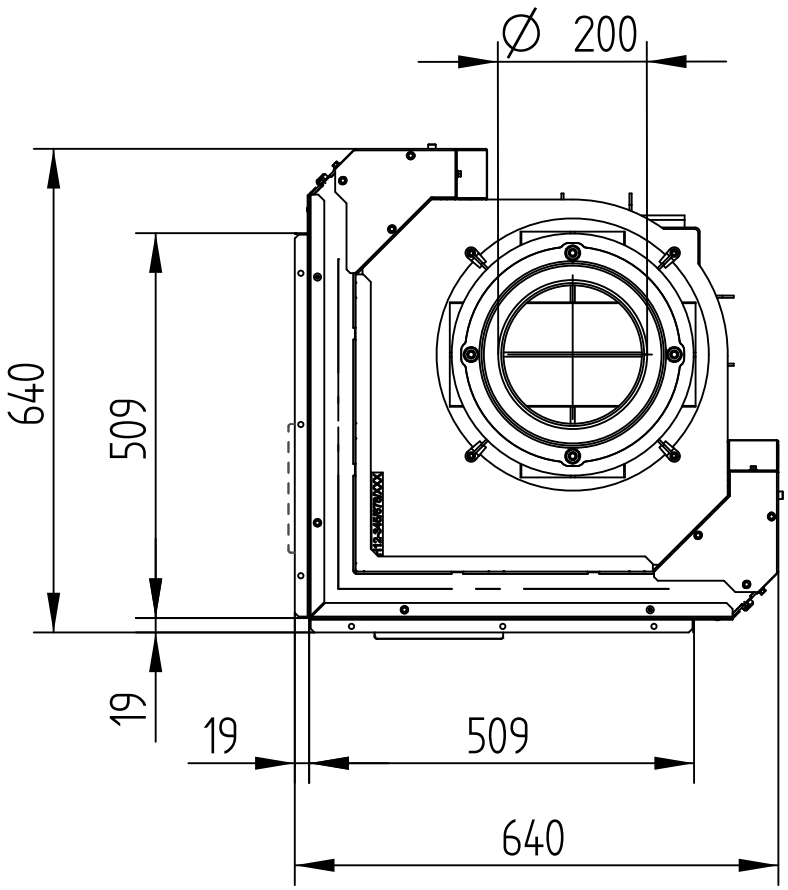

Hoxter gmbh I Hersbrucker Straße 23 I 912 44 Reichenschwand I Germany I info@hoxter.de I +49 (0)9151 8659 163
Hoxter a.s. I Mlynska 326/13 I 602 00 Brno I Czech Republic I info@hoxter.eu I +420 518 777 701

ECKA **51/51/51h**

Technical data
Version **01/2017**

BUILD-ON FRAME 6-SIDED, 50 mm

M 1 : 10

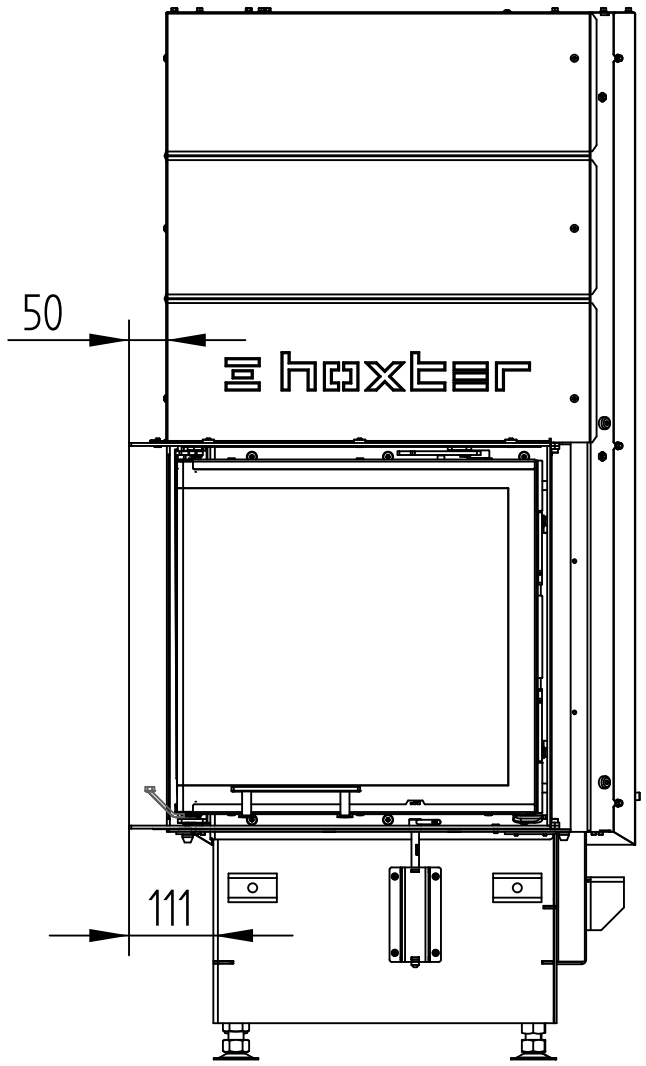

ECKA **51/51/51h**

Technical data
Version **01/2017**

BUILD-ON FRAME 6-SIDED, 50 mm

M 1 : 10

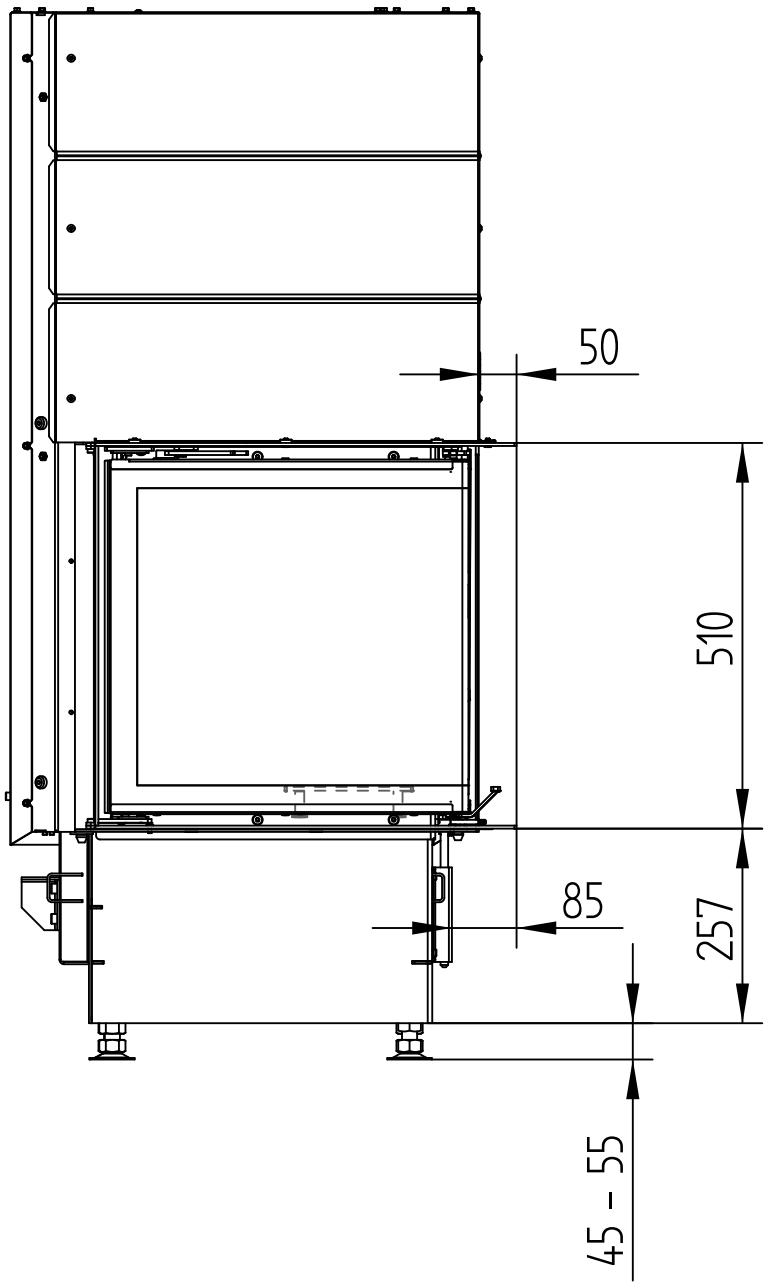

BUILD-ON FRAME 6-SIDED, 50 mm

M 1 : 10

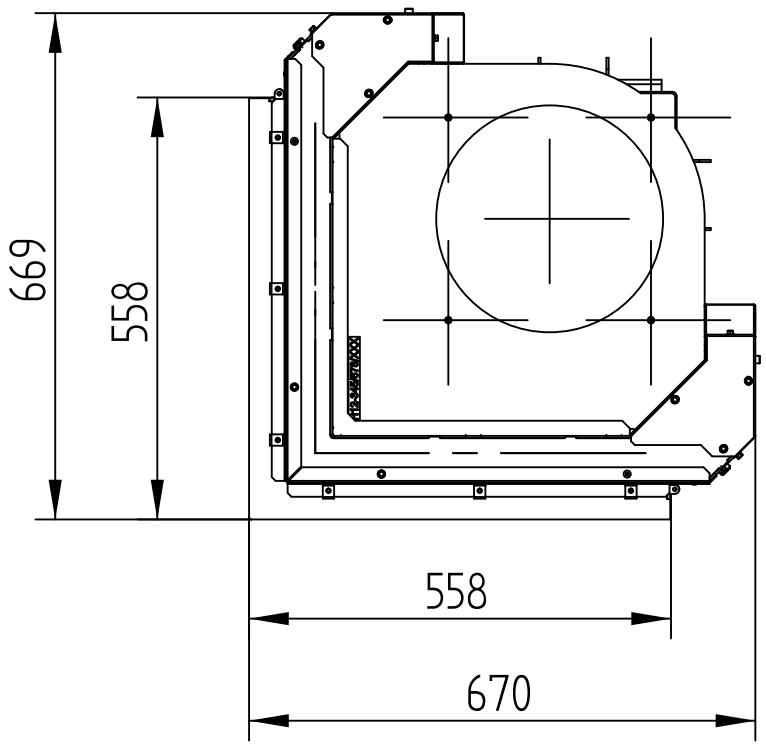

ECKA **51/51/51h**

BUILD-ON FRAME 6-SIDED, 80 mm

M 1 : 10

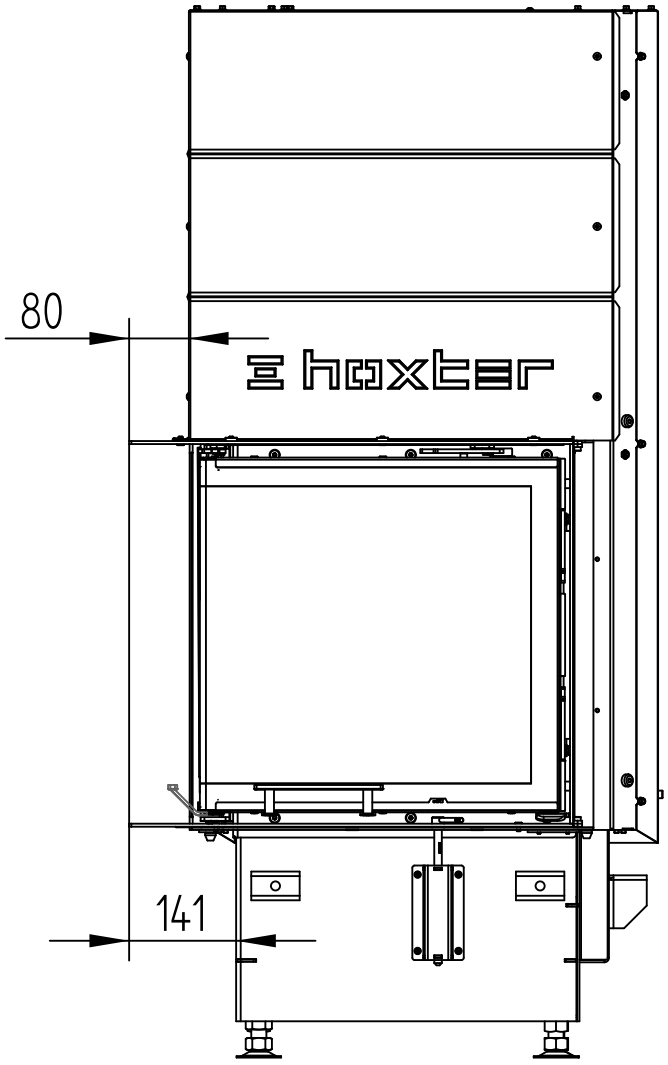

ECKA **51/51/51h**

Technical data
Version **01/2017**

BUILD-ON FRAME 6-SIDED, 80 mm

M 1 : 10

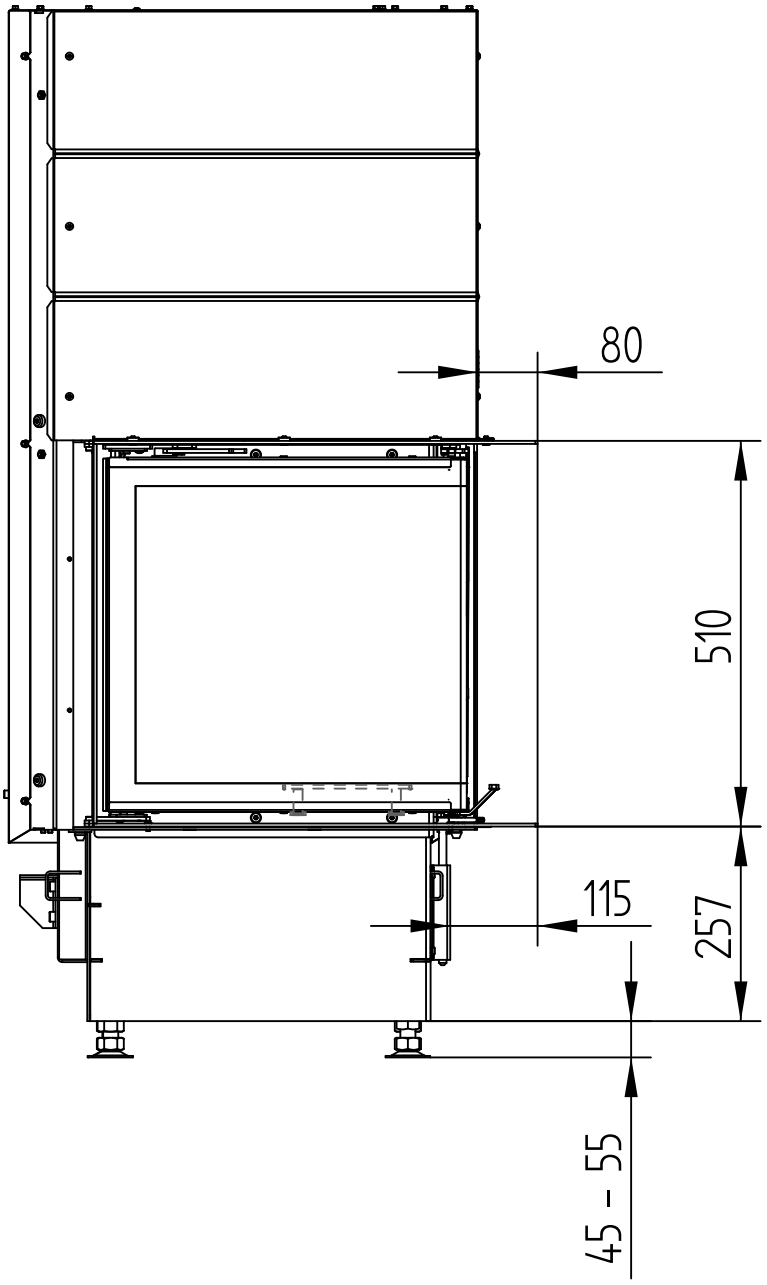

BUILD-ON FRAME 6-SIDED, 80 mm

M 1 : 10

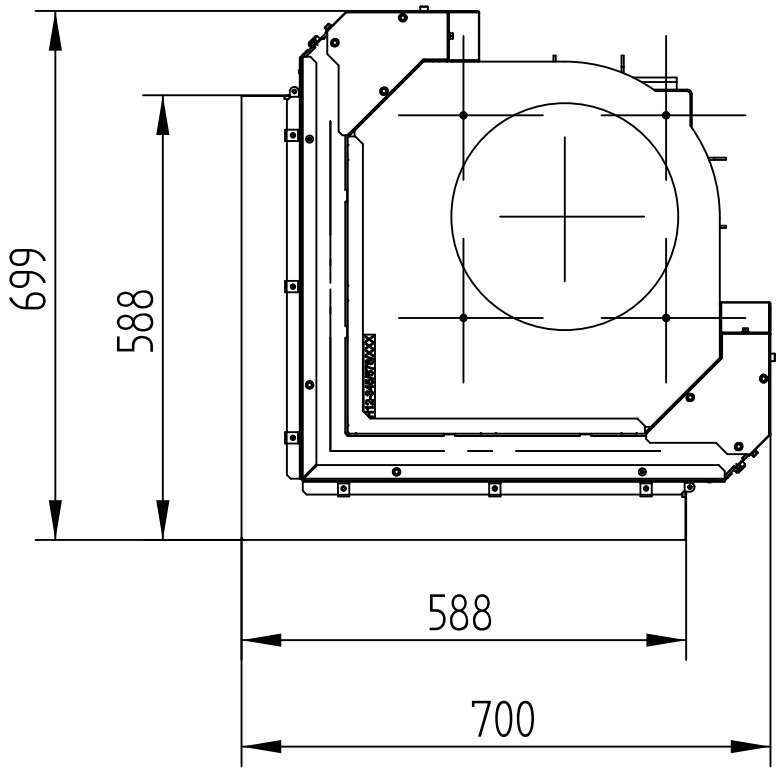

ECKA **51/51/51h**

COVER FRAME 6-SIDED, 60 mm

M 1 : 10

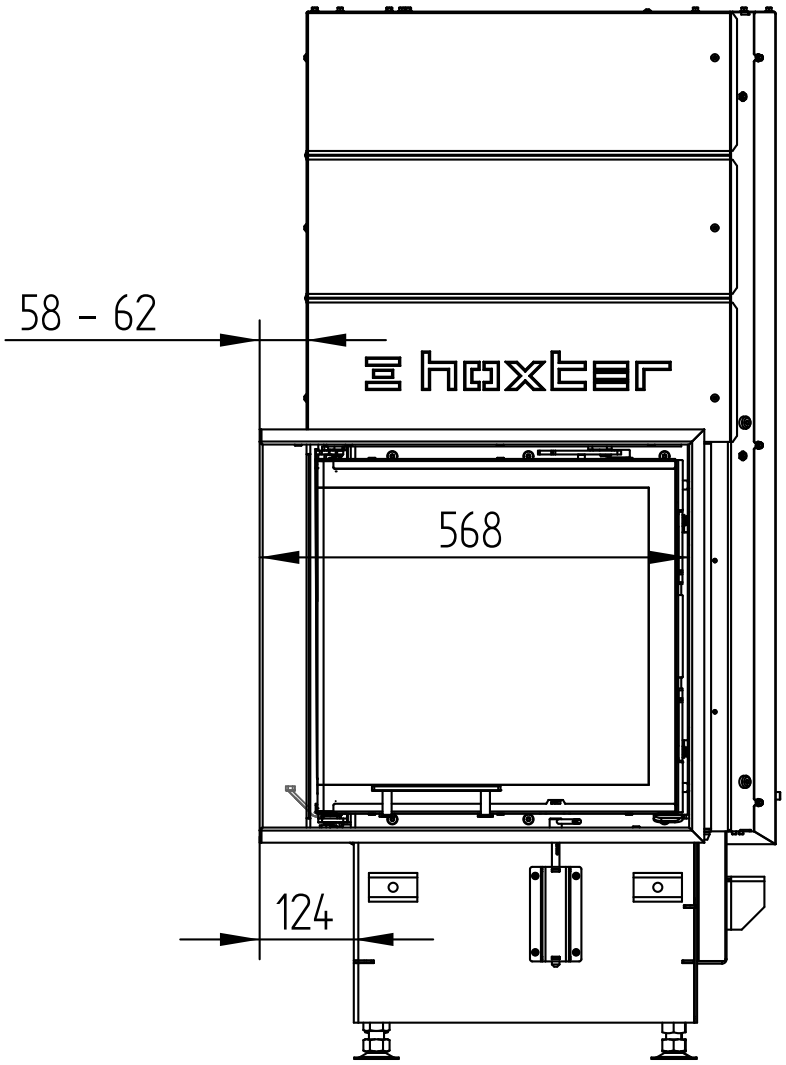

ECKA **51/51/51h**

Technical data
Version **01/2017**

COVER FRAME 6-SIDED, 60 mm

M 1 : 10

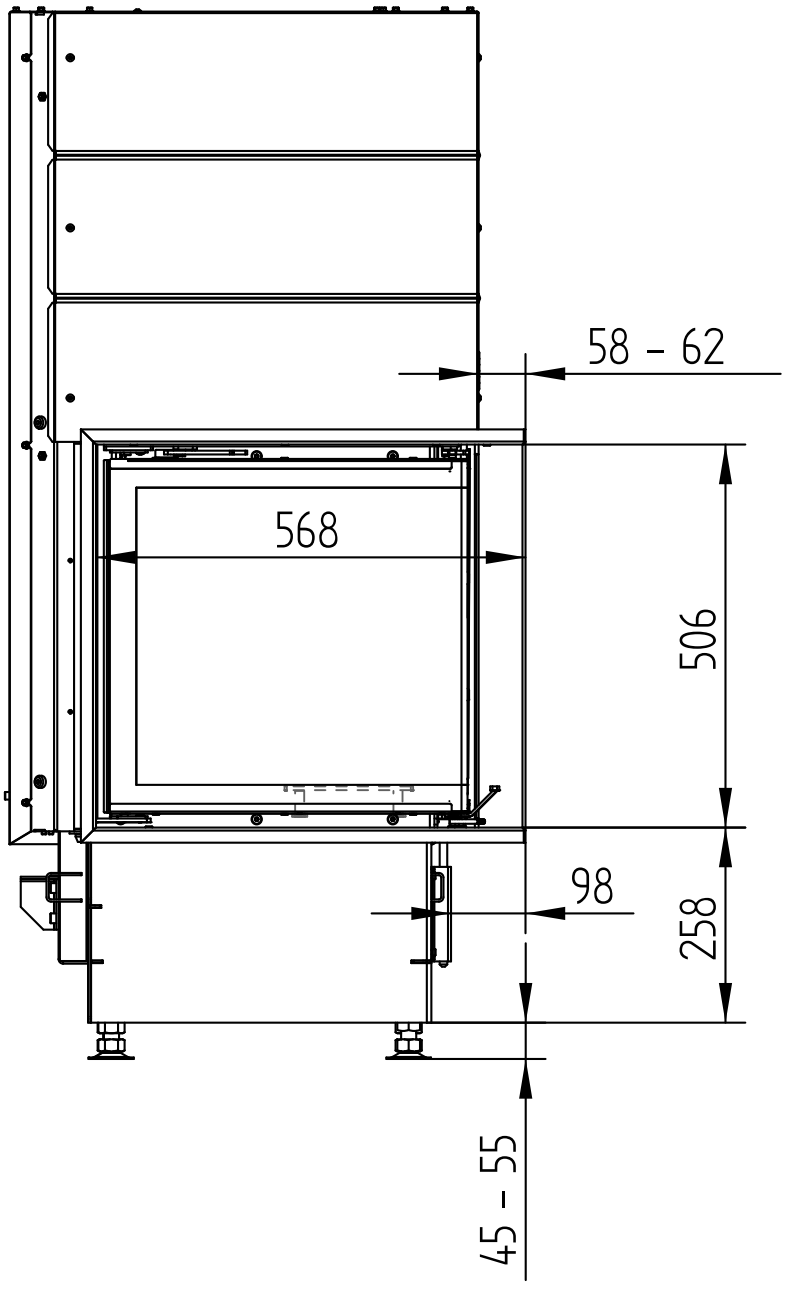

ECKA **51/51/51h**

COVER FRAME 6-SIDED, 60 mm

M 1 : 10

