TILE STOVE INSERTS FROM BRUNNER



# HKD 8

State: 2018-01-31




BRUNNER®
made in germany.

# Dimension sheets - HKD 8

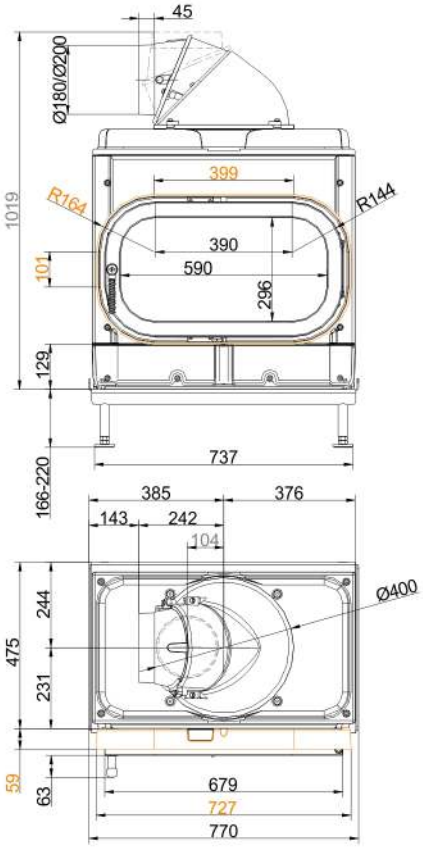


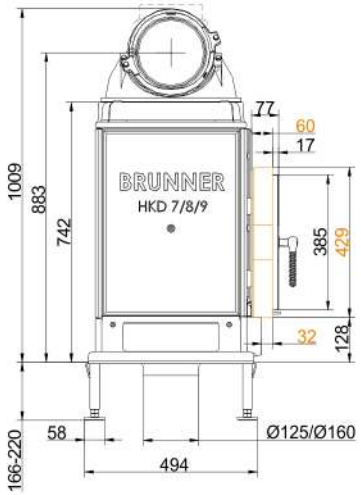


**… mounting frame with cast iron dome**

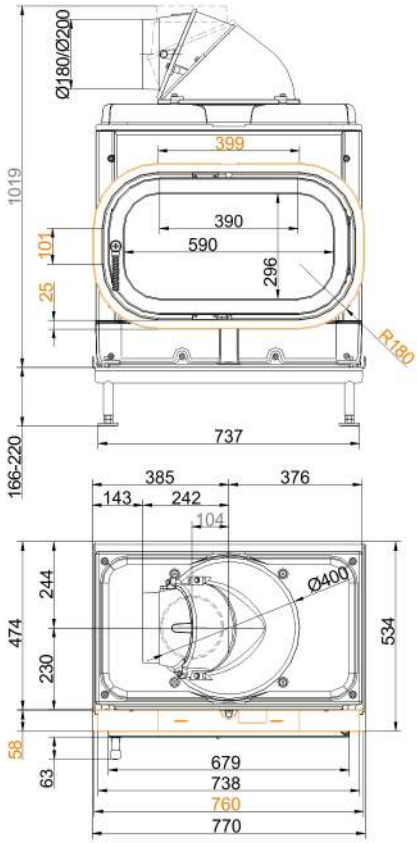


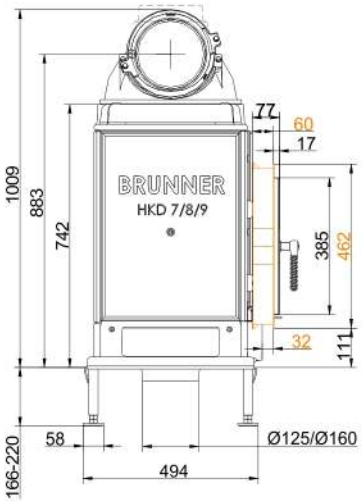


**… door frame with cast iron dome**

State: 2018-01-31

# Dimension sheets - HKD 8

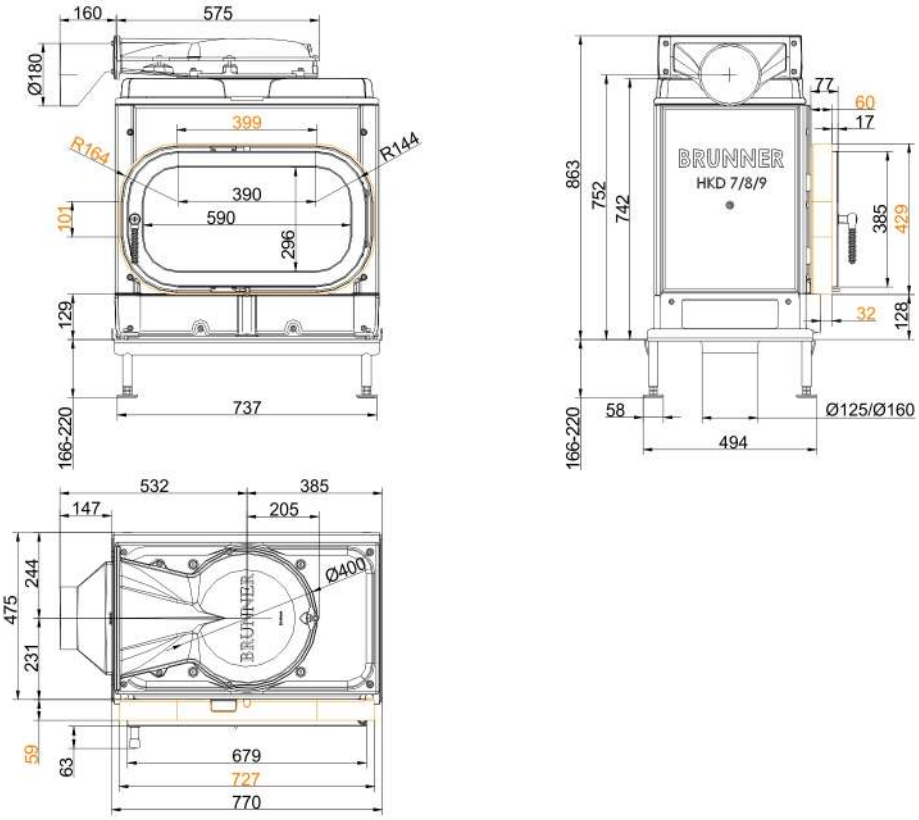


**… mounting frame with cast iron dome low**

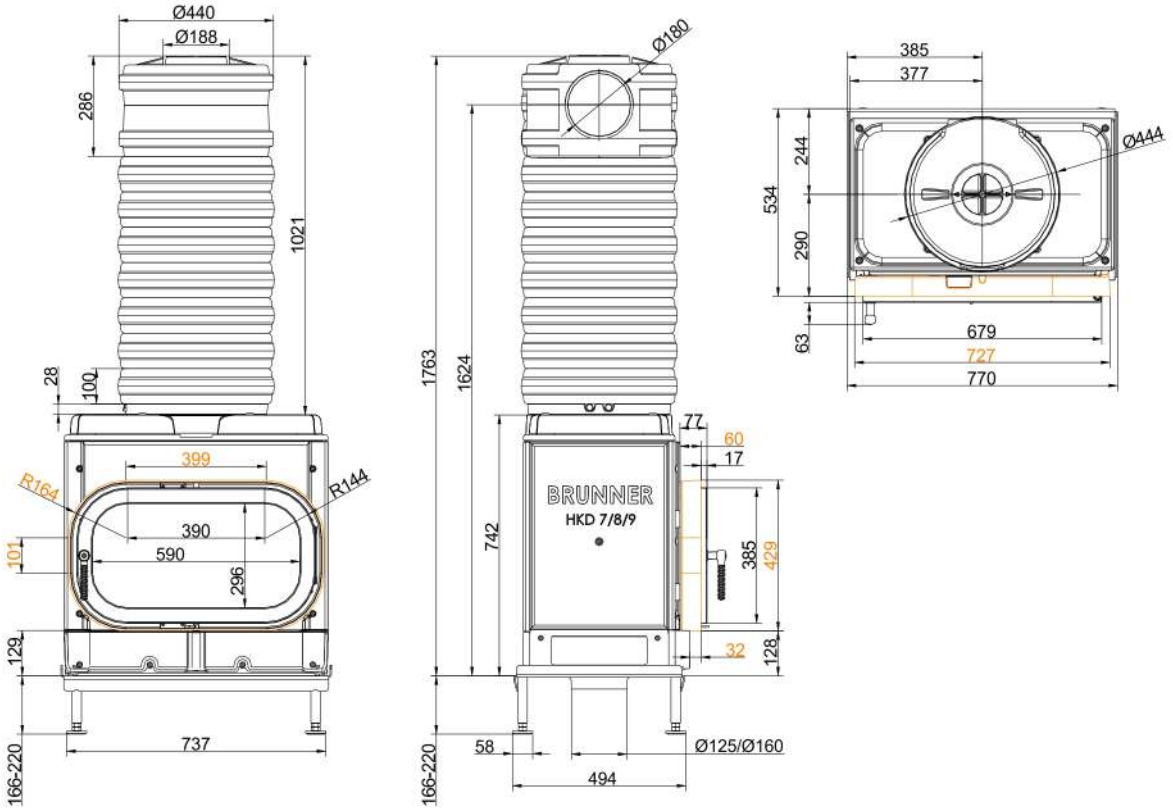


**… mounting frame with MAS**

State: 2018-01-31

# Dimension sheets - HKD 8

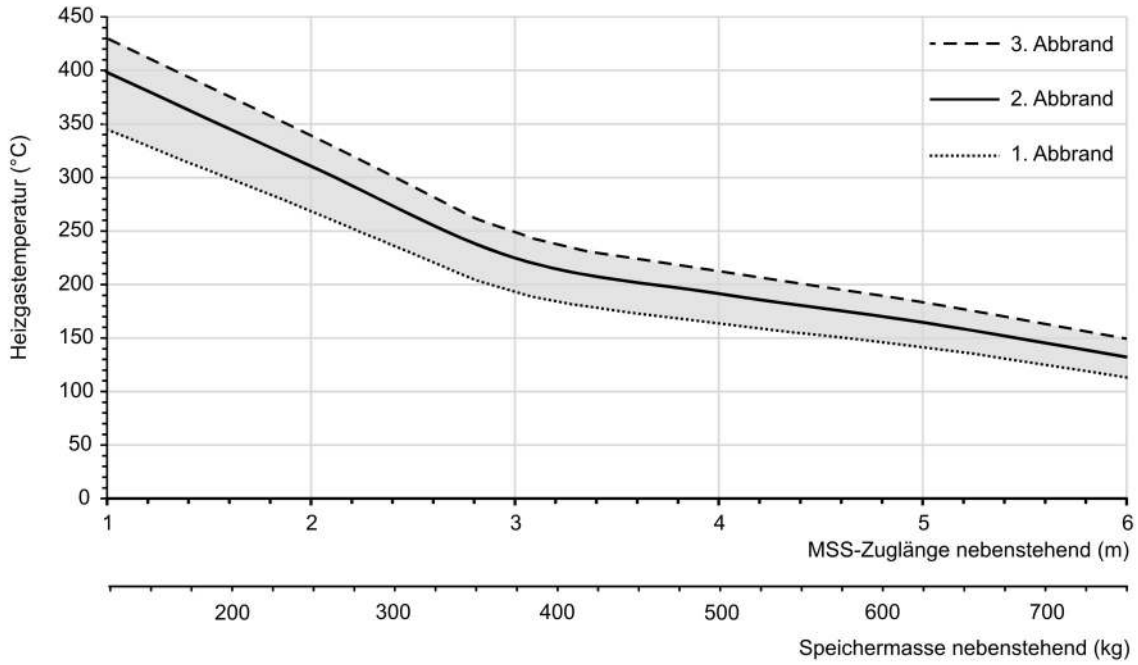


**… design characteristics for adjacent storage mass**

We suggest for CAD planing Palette CAD. Permanent updated drawings: www.brunner.de
Frames / front versions are marked colored.

State: 2018-01-31

# Planning and installation - HKD 8

| Tested according to | | EN 13229 W | EN 13229 WA |
|---|---|---|---|
| Values measured at | | Rated capacity | Accumulation |
| Suitable for all construction types according to rules | | OK | OK |
| EEI | | 114.3 | 114.3 |
| **Data for functional demonstration** | | | |
| Rated heat power | kW | 9 | - |
| Fire wood volume | kg/h | 2.7 | 5.5 |
| Combustion performance | kW | 10.5 | 22 |
| Flue gas mass flow | g/s | 8.5 | 20 |
| Outlet temperature (before heating surface) | °C | 460 | 540 |
| Flue gas temperature after: | | | |
| 1 x adjoining cast iron radiator (GNF 8/10) | °C | 180 | 215 |
| 7 x accumulation rings (MAS) [1] | °C | 220 | - |
| 4,9 m ceramic accumulator [2] | °C | - | 180 |
| 3,4 m accumulation stones (MSS) [2] | °C | - | 190 |
| Necessary supply pressure | Pa | 12 | 15 |
| Combustion air consumption | $m^3/h$ | 25 | 48 |
| Combustion air connection Ø | mm | 125 / 160 | 125 / 160 |
| **Heat distribution** | | | |
| Insert / heat accumulator | % | 40 / 40 | 40 / 40 |
| Glass pane (single / double) | % | - / 20 | - / 20 |
| **Cross-section of gratings [3]** | | | |
| Supply air | $cm^2$ | 700 / 300 / 500 | 700 / 300 / 500 |
| Warm air | $cm^2$ | 700 / 300 / 500 | 700 / 300 / 500 |
| **Minimal distances of the fireplace** | | | |
| to insulation layer | cm | 8 | 8 |
| to mounting floor | cm | 15 | 15 |
| **Thermal insulation without / with air gratings [4]** | | | |
| Mounting wall | cm | 12 / 10 | 12 / 10 |
| Floor | cm | 0 | 0 |
| Ceiling | cm | 22 / 16 | 22 / 16 |
| Brick lining for combustible wall | cm | 10 | 10 |
| **Weight** | | | |
| Fireplace / combustion chamber | kg | 254 / 66 | |
| **Meets requirement/limit values for:** | | | |
| Germany/ Austria / Suisse / Norway | | 1.BImSchV (Stufe 2) / 15a BVG (2015) / LRV / - | |

1) Damper flap recommended
2) Approximate value. Determination according to design characteristics for adjacent storage mass or proof of function provided by calculation
3) for fireplace inserts / flue gas pipe / metallic reheating surface
4) Values determined with upper air sections; stove cladding is heat emitting.

Ulrich Brunner GmbH
Zellhuber Ring 17 - 18
D-84307 Eggenfeldern
Telefonat: +49 / (0)87 21 / 7 71-0
Telefax: +49 / (0)87 21 / 7 71-100
info@brunner.de | www.brunner.de

BRUNNER®
made in germany.