HAKA **37/50GN**

A

Technical data
Version **01/2018**

OPERATION WHEN DIRECTLY CONNECTED TO CHIMNEY	Cupola	Hot air exchanger
Tested according to	EN 13229	EN 13229
Nominal heat power	6 kW	9 kW
Efficiency	> 80 %	> 80 %
Consumption of wood	1,8 kg/h	2,6 kg/h
Mass flow of flue gas	6,1 g/s	7,5 g/s
Average flue gas temperature on the output	232 °C	255 °C
Heat distribution		
fireplace insert	74–84 %	74–84 %
door glass (single / double)	26 / 16 %	26 / 16 %
Required chimney pressure	12 Pa	12 Pa
Required amount of combustion air	20 m^3/h	25 m^3/h
Minimum supply air grating cross-section	600 cm^2	900 cm^2
Minimum outgoing air grating cross-section	700 cm^2	1050 cm^2

OPERATION WITH CONNECTED ACCUMULATION MASS	Cupola	Adaptor
Load of wood	8 kg	6 kg
Total heat output of the burning chamber	30 kW	24 kW
Mass flow of flue gas	25 g/s	20 g/s
Average flue gas temperature		
on the output [1]	524 °C	423 °C
past 4 m of ceramic accumulation system KMS 300 [2]	184 °C	–
past 5 pcs of accumulation rings KAM + termination ring	–	242 °C
Heat distribution		
fireplace insert	38 %	34 %
door glass (single / double)	26 / 16 %	26 / 16 %
adjoining accumulation mass	36–46 %	40–50 %
Required chimney pressure	12 Pa	12 Pa
Minimum radiant area [3]	ca 7 m^2	ca. 5,5 m^2
Required amount of combustion air	100 m^3/h	70 m^3/h

GENERAL TECHNICAL INFORMATION	
Combustion air connection	Ø 150 mm
Total weight / lining weight	ca. 193 / 88 kg
Use in non-ventilated accumulation builds according to craft rules	suitable
Meets values	BImSchV (Stufe2), 15a BVG

1) The Hoxter products are available in the Austrian stove-calculation program for evaluation of firebrick accumulation systems.
2) Only a sample calculation! For accurate results is evaluation of each system in the KMS-calculation program from the Ortner company necessary.
3) Depends on accumulation period and material characteristics and its thickness. Calculated with heat emission of the radiant area ca. 500 $W/m^2.hr$

Hoxter gmbh I Hersbrucker Straße 23 I 912 44 Reichenschwand I Germany I info@hoxter.de I +49 (0)9151 8659 163
Hoxter a.s. I Jinacovice 509 I 664 34 Jinacovice I Czech Republic I info@hoxter.eu I +420 518 777 701

HAKA **37/50GN**

A

Technical data
Version **01/2018**

OPERATION WHEN DIRECTLY CONNECTED TO CHIMNEY	Cupola	Hot air exchanger
Tested according to	EN 13229	EN 13229
Nominal heat power	6 kW	9 kW
Efficiency	> 80 %	> 80 %
Consumption of wood	1,8 kg/h	2,6 kg/h
Mass flow of flue gas	6,1 g/s	7,5 g/s
Average flue gas temperature on the output	232 °C	255 °C
Heat distribution		
fireplace insert	74–84 %	74–84 %
door glass (single / double)	26 / 16 %	26 / 16 %
Required chimney pressure	12 Pa	12 Pa
Required amount of combustion air	20 m^3/h	25 m^3/h
Minimum supply air grating cross-section	600 cm^2	900 cm^2
Minimum outgoing air grating cross-section	700 cm^2	1050 cm^2

OPERATION WITH CONNECTED ACCUMULATION MASS	Cupola	Adaptor
Load of wood	8 kg	6 kg
Total heat output of the burning chamber	30 kW	24 kW
Mass flow of flue gas	25 g/s	20 g/s
Average flue gas temperature		
on the output [1]	524 °C	423 °C
past 4 m of ceramic accumulation system KMS 300 [2]	184 °C	–
past 5 pcs of accumulation rings KAM + termination ring	–	242 °C
Heat distribution		
fireplace insert	38 %	34 %
door glass (single / double)	26 / 16 %	26 / 16 %
adjoining accumulation mass	36–46 %	40–50 %
Required chimney pressure	12 Pa	12 Pa
Minimum radiant area [3]	ca 7 m^2	ca. 5,5 m^2
Required amount of combustion air	100 m^3/h	70 m^3/h

GENERAL TECHNICAL INFORMATION	
Combustion air connection	Ø 150 mm
Total weight / lining weight	ca. 193 / 88 kg
Use in non-ventilated accumulation builds according to craft rules	suitable
Meets values	BImSchV (Stufe2), 15a BVG

1) The Hoxter products are available in the Austrian stove-calculation program for evaluation of firebrick accumulation systems.
2) Only a sample calculation! For accurate results is evaluation of each system in the KMS-calculation program from the Ortner company necessary.
3) Depends on accumulation period and material characteristics and its thickness. Calculated with heat emission of the radiant area ca. 500 W/m^2.hr

Hoxter gmbh I Hersbrucker Straße 23 I 912 44 Reichenschwand I Germany I info@hoxter.de I +49 (0)9151 8659 163
Hoxter a.s. I Jinacovice 509 I 664 34 Jinacovice I Czech Republic I info@hoxter.eu I +420 518 777 701

HAKA **37/50GN**

Technical data
Version **01/2018**

WITH CUPOLA

M 1 : 10

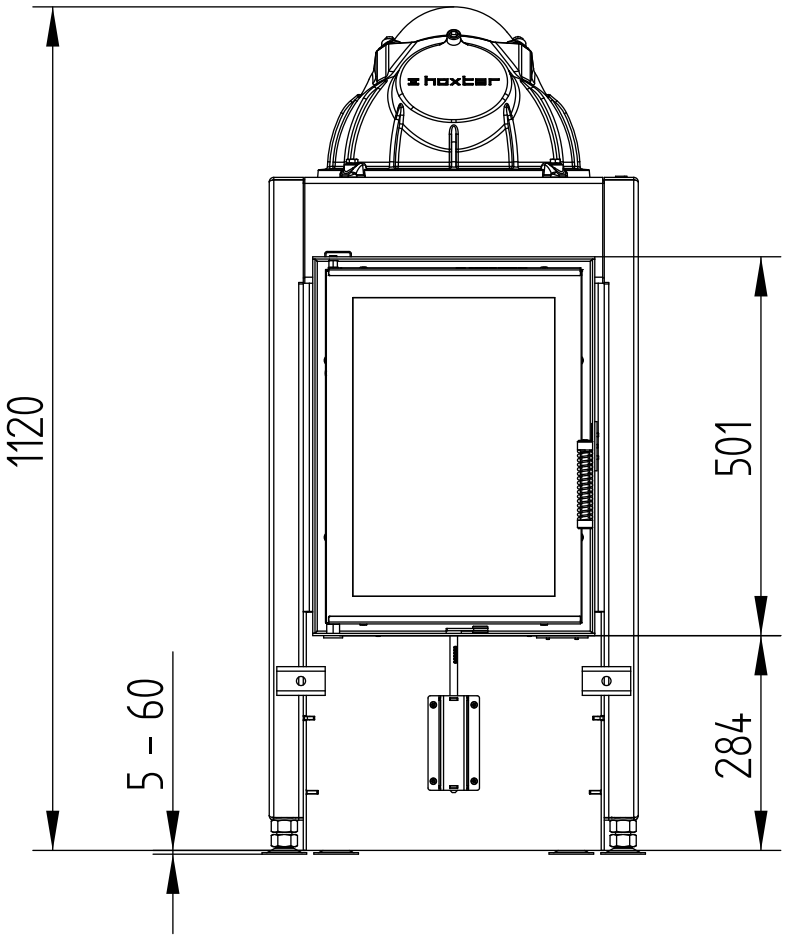

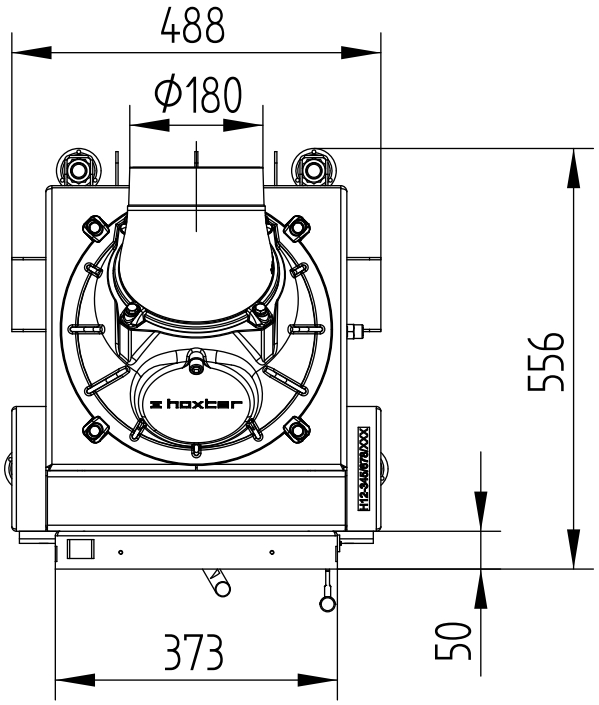

Hoxter gmbh I Hersbrucker Straße 23 I 912 44 Reichenschwand I Germany I info@hoxter.de I +49 (0)9151 8659 163
Hoxter a.s. I Jinacovice 509 I 664 34 Jinacovice I Czech Republic I info@hoxter.eu I +420 518 777 701

HAKA **37/50GN**

Technical data
Version **01/2018**

WITH CUPOLA

M 1 : 10

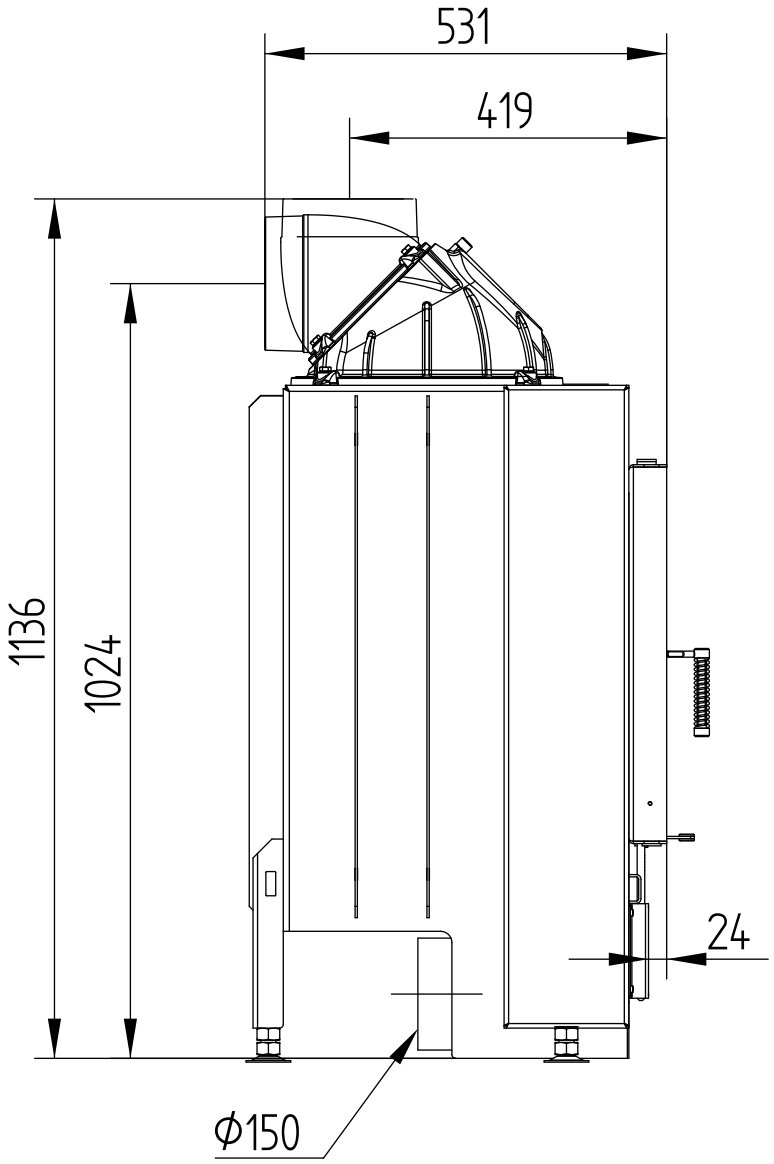

Hoxter gmbh I Hersbrucker Straße 23 I 912 44 Reichenschwand I Germany I info@hoxter.de I +49 (0)9151 8659 163
Hoxter a.s. I Jinacovice 509 I 664 34 Jinacovice I Czech Republic I info@hoxter.eu I +420 518 777 701

HAKA **37/50GN**

Technical data
Version **01/2018**

WITH ADAPTOR

M 1 : 10

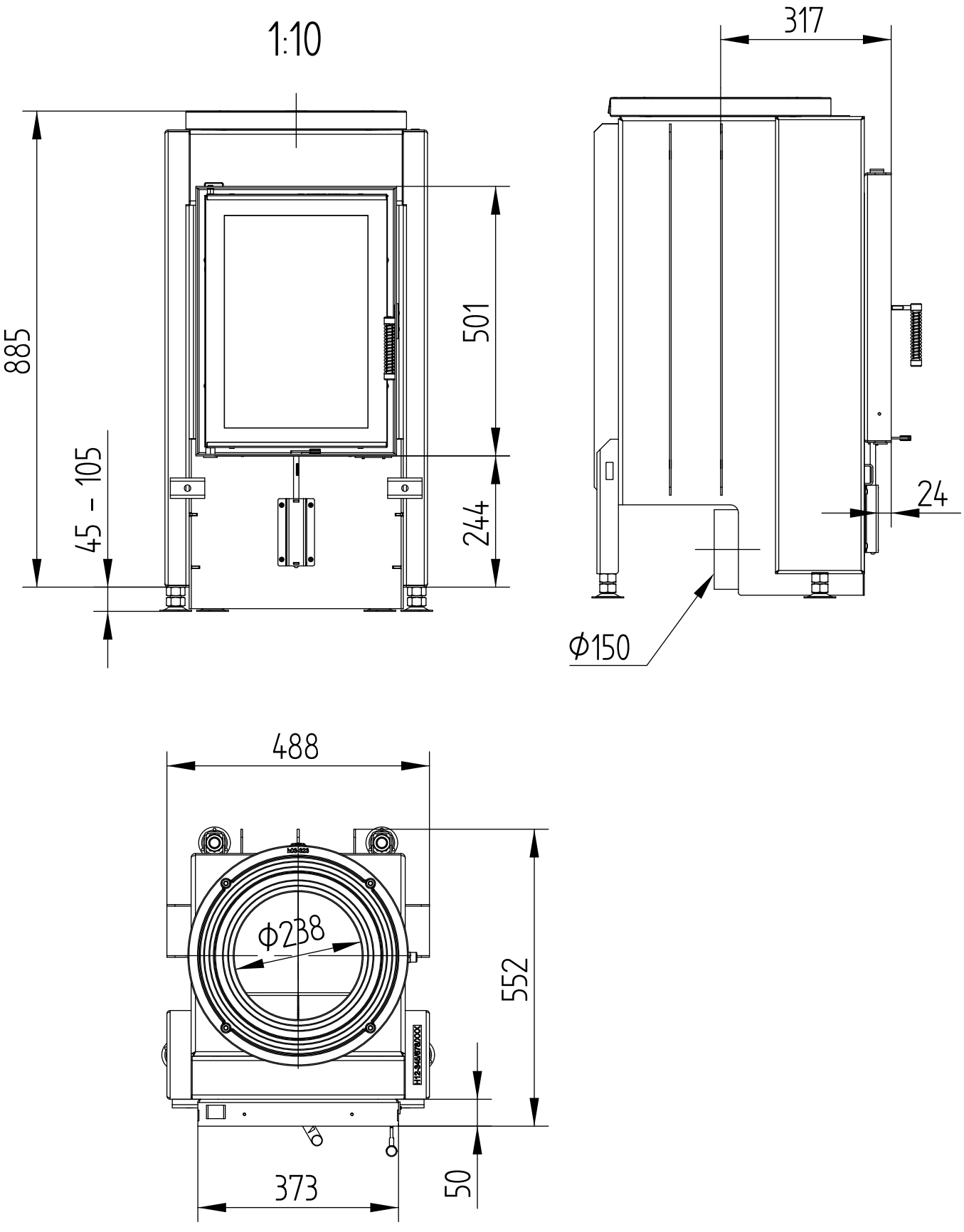

HAKA **37/50GN**

Technical data
Version **01/2018**

WITH HOT AIR EXCHANGER

M 1 : 10

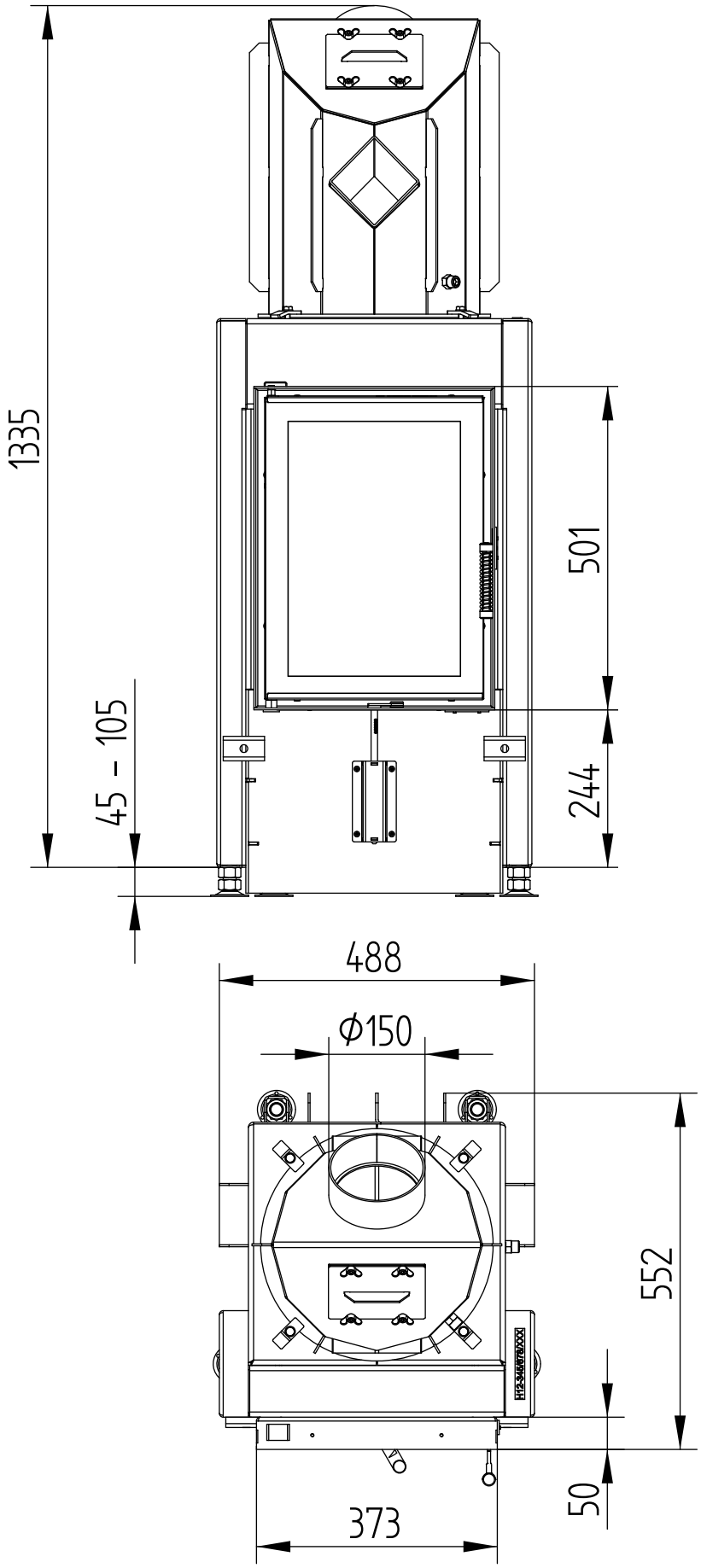

Hoxter gmbh I Hersbrucker Straße 23 I 912 44 Reichenschwand I Germany I info@hoxter.de I +49 (0)9151 8659 163
Hoxter a.s. I Jinacovice 509 I 664 34 Jinacovice I Czech Republic I info@hoxter.eu I +420 518 777 701

HAKA **37/50GN**

Technical data
Version **01/2018**

WITH HOT AIR EXCHANGER

M 1 : 10

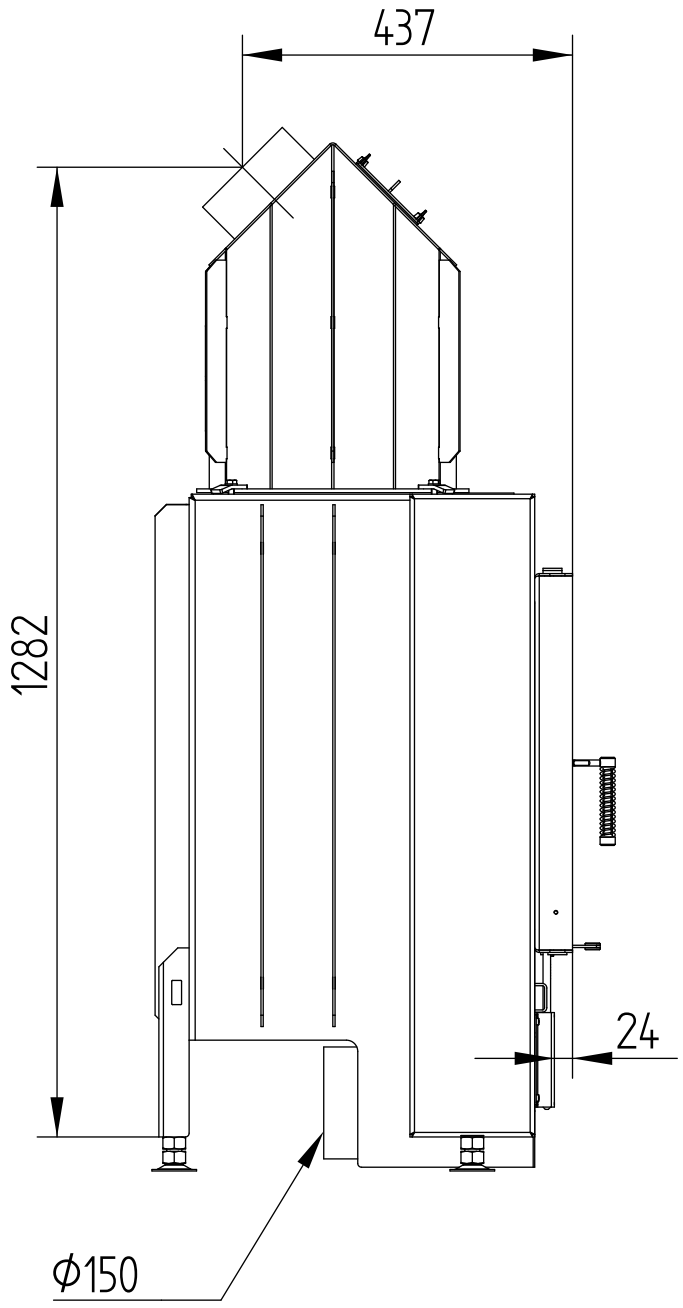

Hoxter gmbh I Hersbrucker Straße 23 I 912 44 Reichenschwand I Germany I info@hoxter.de I +49 (0)9151 8659 163
Hoxter a.s. I Jinacovice 509 I 664 34 Jinacovice I Czech Republic I info@hoxter.eu I +420 518 777 701

HAKA **37/50GN**

Technical data
Version **01/2018**

WITH HOT AIR EXCHANGER VERTICAL

M 1 : 10

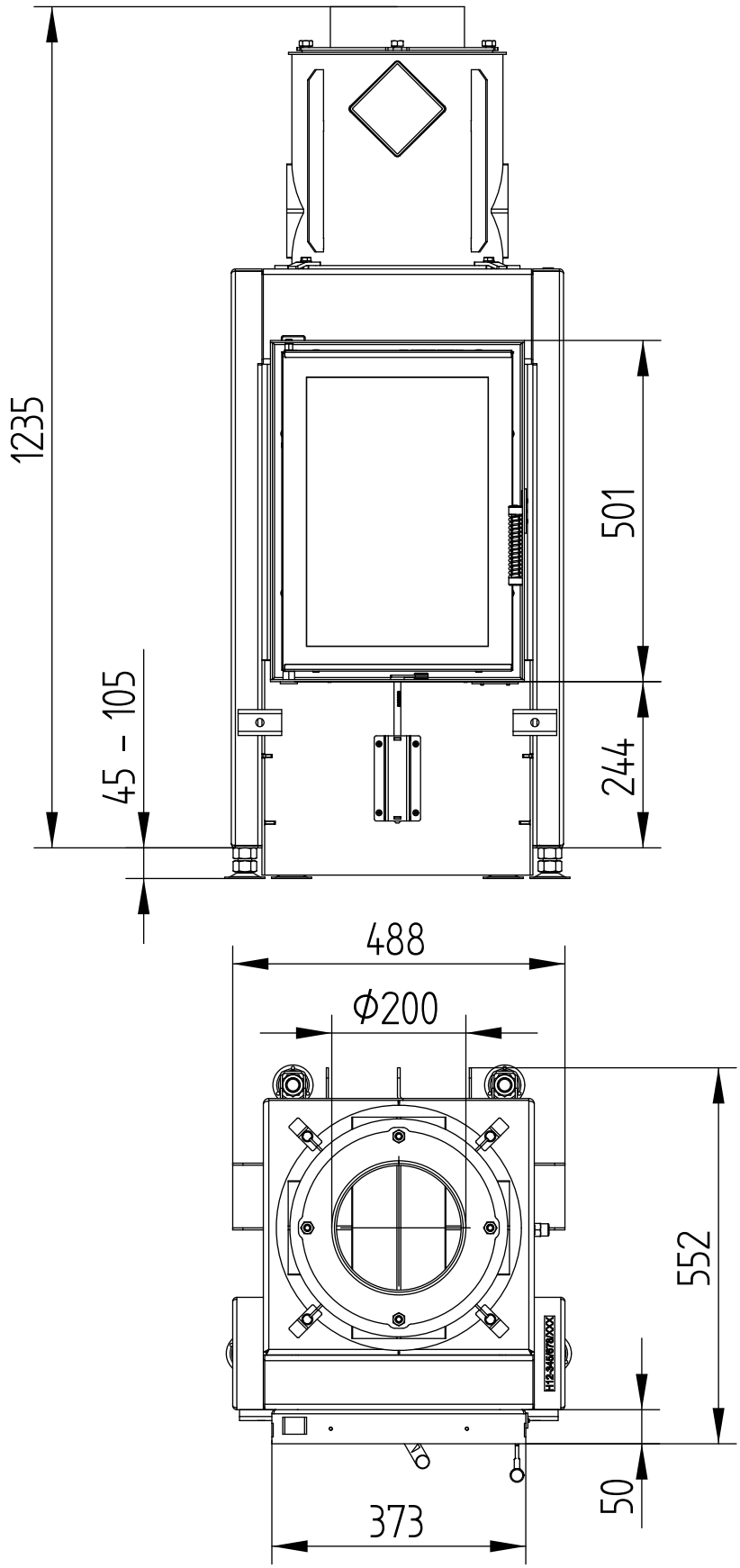

Hoxter gmbh I Hersbrucker Straße 23 I 912 44 Reichenschwand I Germany I info@hoxter.de I +49 (0)9151 8659 163
Hoxter a.s. I Jinacovice 509 I 664 34 Jinacovice I Czech Republic I info@hoxter.eu I +420 518 777 701

HAKA **37/50GN**

WITH HOT AIR EXCHANGER VERTICAL

Technical data
Version **01/2018**

M 1 : 10

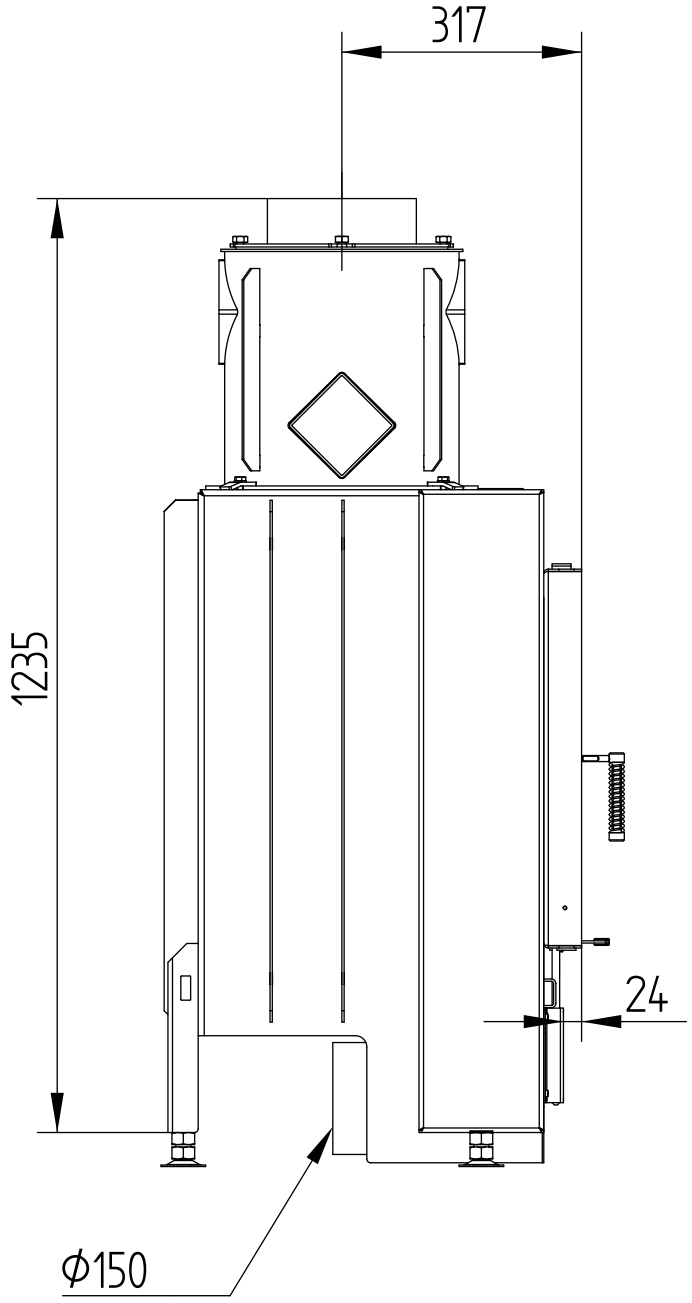

Hoxter gmbh I Hersbrucker Straße 23 I 912 44 Reichenschwand I Germany I info@hoxter.de I +49 (0)9151 8659 163
Hoxter a.s. I Jinacovice 509 I 664 34 Jinacovice I Czech Republic I info@hoxter.eu I +420 518 777 701

HAKA **37/50GN**

Technical data
Version **01/2018**

COVER FRAME 4-SIDED 1 x 90°

M 1 : 10

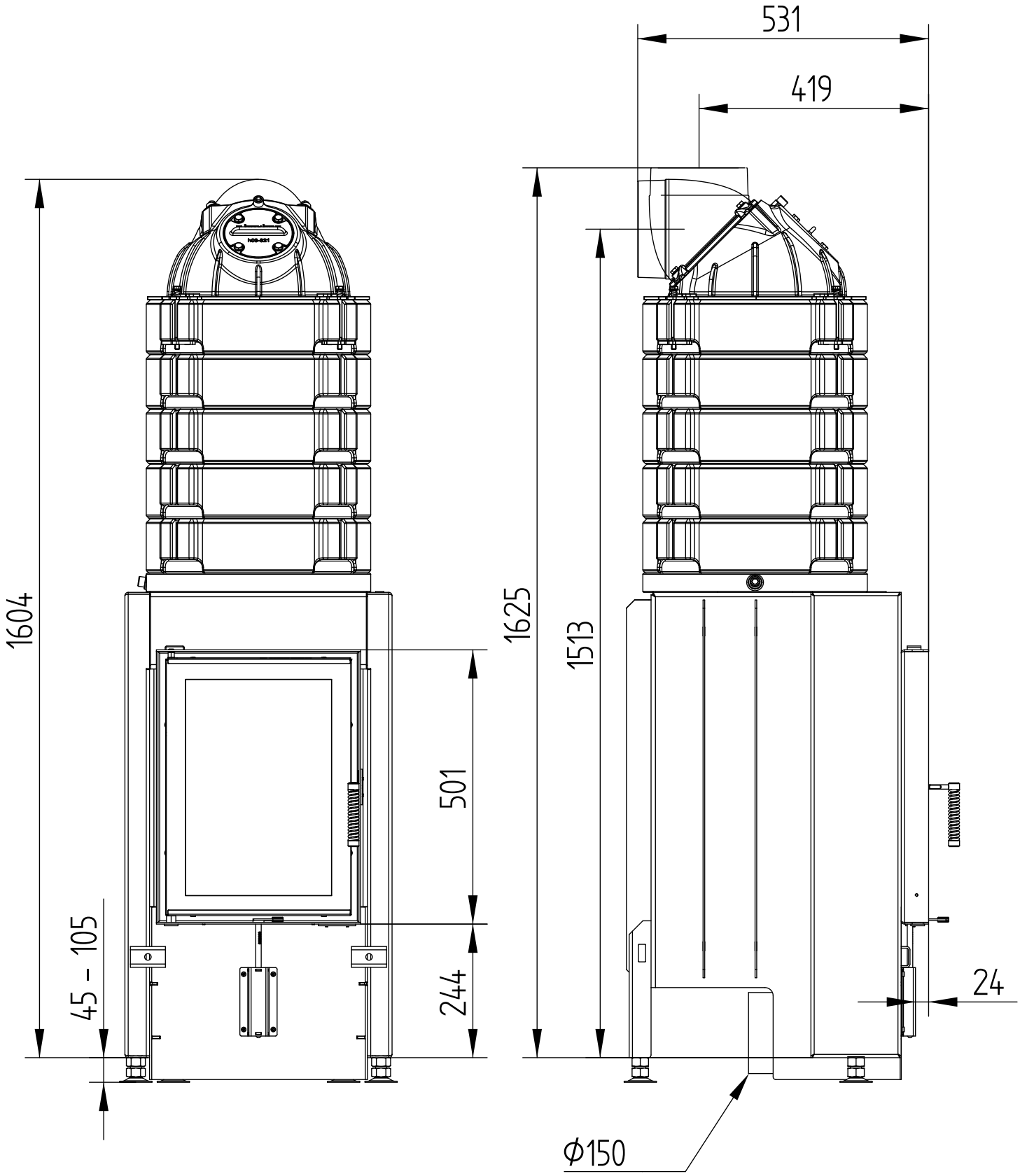

HAKA **37/50GN**

COVER FRAME 4-SIDED 2 x 45°

M 1 : 10

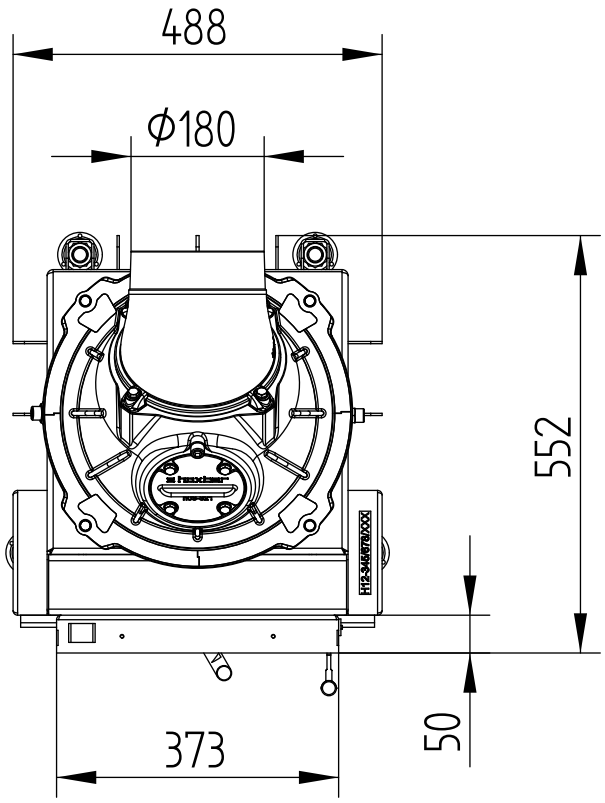

Hoxter gmbh I Hersbrucker Straße 23 I 912 44 Reichenschwand I Germany I info@hoxter.de I +49 (0)9151 8659 163
Hoxter a.s. I Jinacovice 509 I 664 34 Jinacovice I Czech Republic I info@hoxter.eu I +420 518 777 701

HAKA **37/50GN**

Technical data
Version **01/2018**

COVER FRAME 4-SIDED 1 x 90°

M 1 : 10

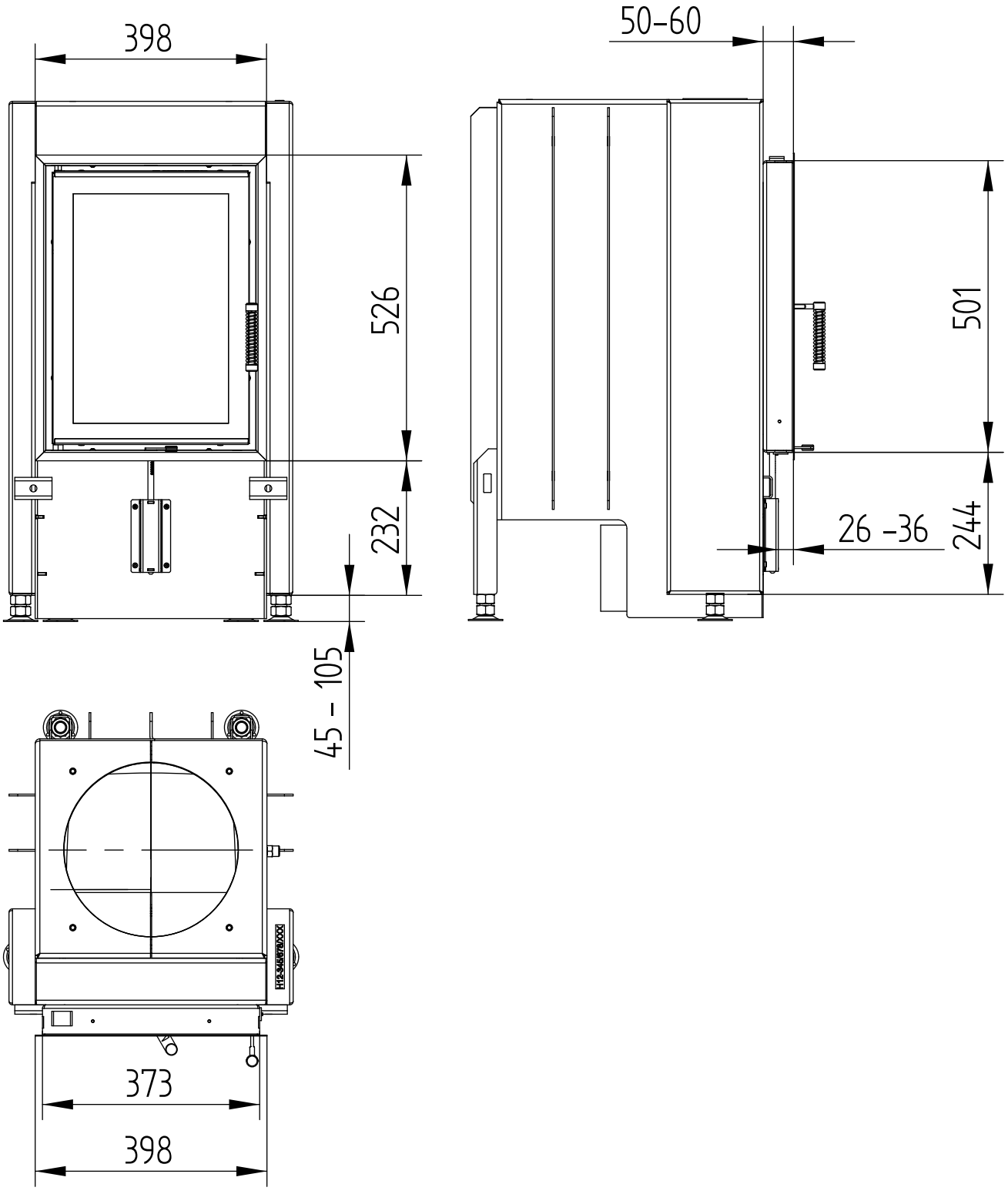

Hoxter gmbh I Hersbrucker Straße 23 I 912 44 Reichenschwand I Germany I info@hoxter.de I +49 (0)9151 8659 163
Hoxter a.s. I Jinacovice 509 I 664 34 Jinacovice I Czech Republic I info@hoxter.eu I +420 518 777 701

HAKA **37/50GN**

Technical data
Version **01/2018**

COVER FRAME 4-SIDED 2 x 45°

M 1 : 10

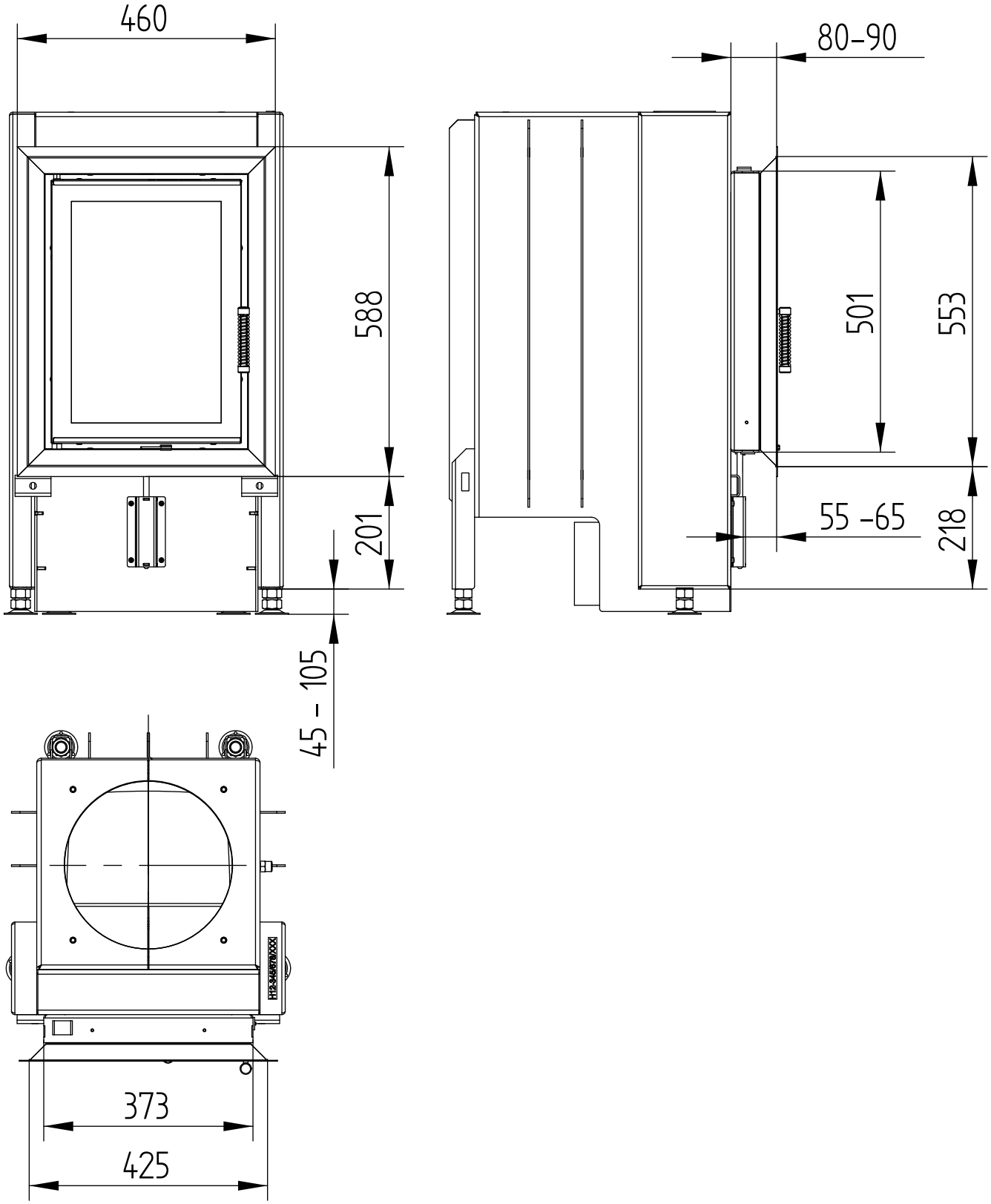

Hoxter gmbh I Hersbrucker Straße 23 I 912 44 Reichenschwand I Germany I info@hoxter.de I +49 (0)9151 8659 163
Hoxter a.s. I Jinacovice 509 I 664 34 Jinacovice I Czech Republic I info@hoxter.eu I +420 518 777 701