FIREPLACE INSERTS FROM BRUNNER



Panorama-Kamin 57/40/60/40

lifting door (easy-lift)

State: 2018-02-06



BRUNNER®
made in germany.

Dimension sheets - Panorama-Kamin 57/40/60/40 lifting door (easy-lift)

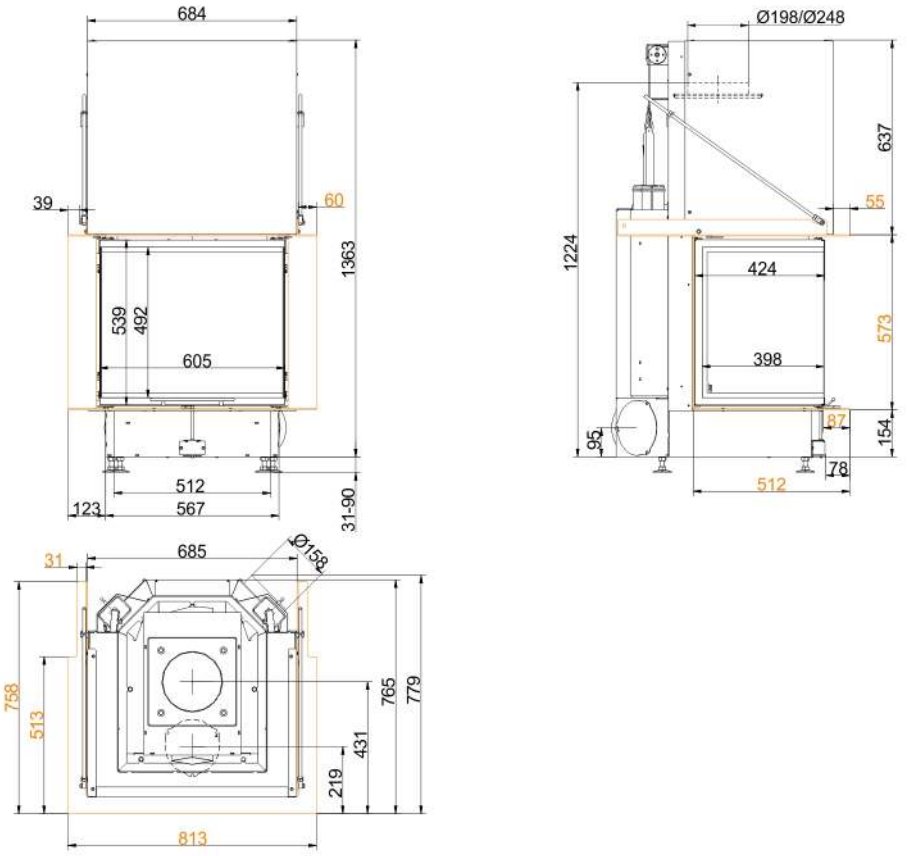

… with fire table

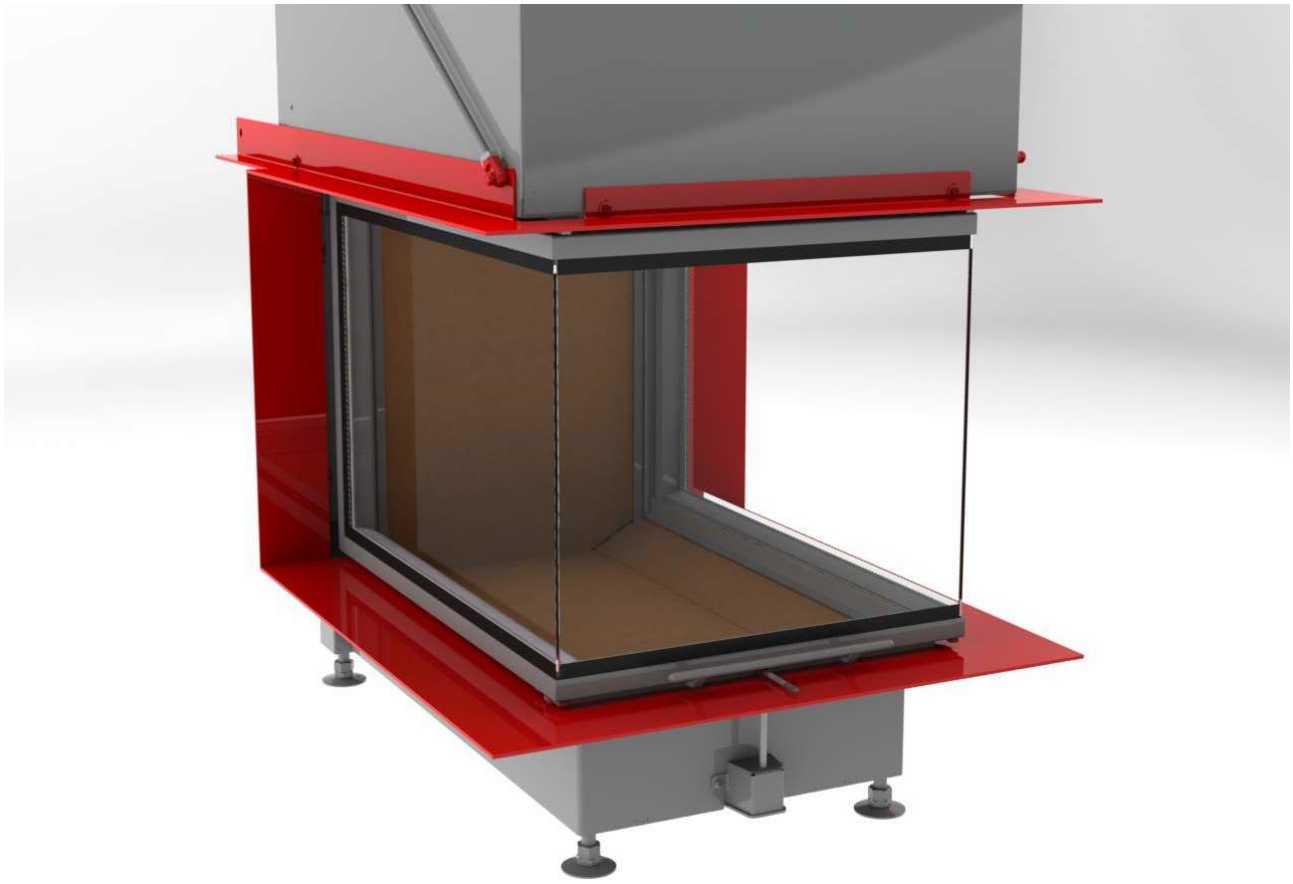

State: 2018-02-06

Dimension sheets - Panorama-Kamin 57/40/60/40 lifting door (easy-lift)

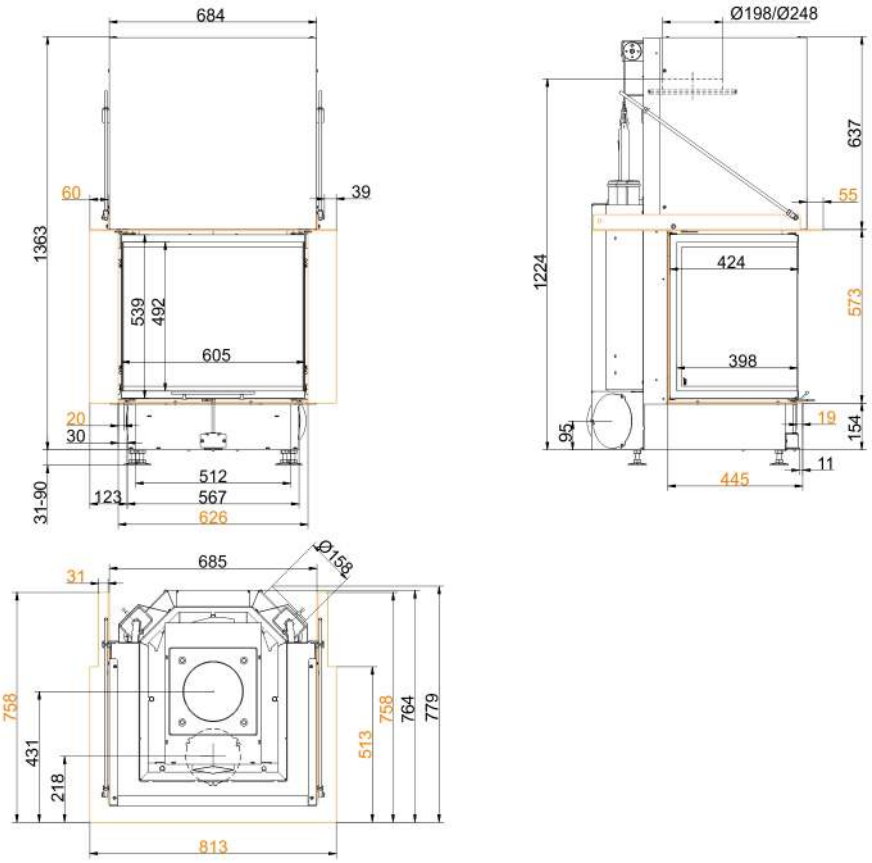

… with fire table mounting frame

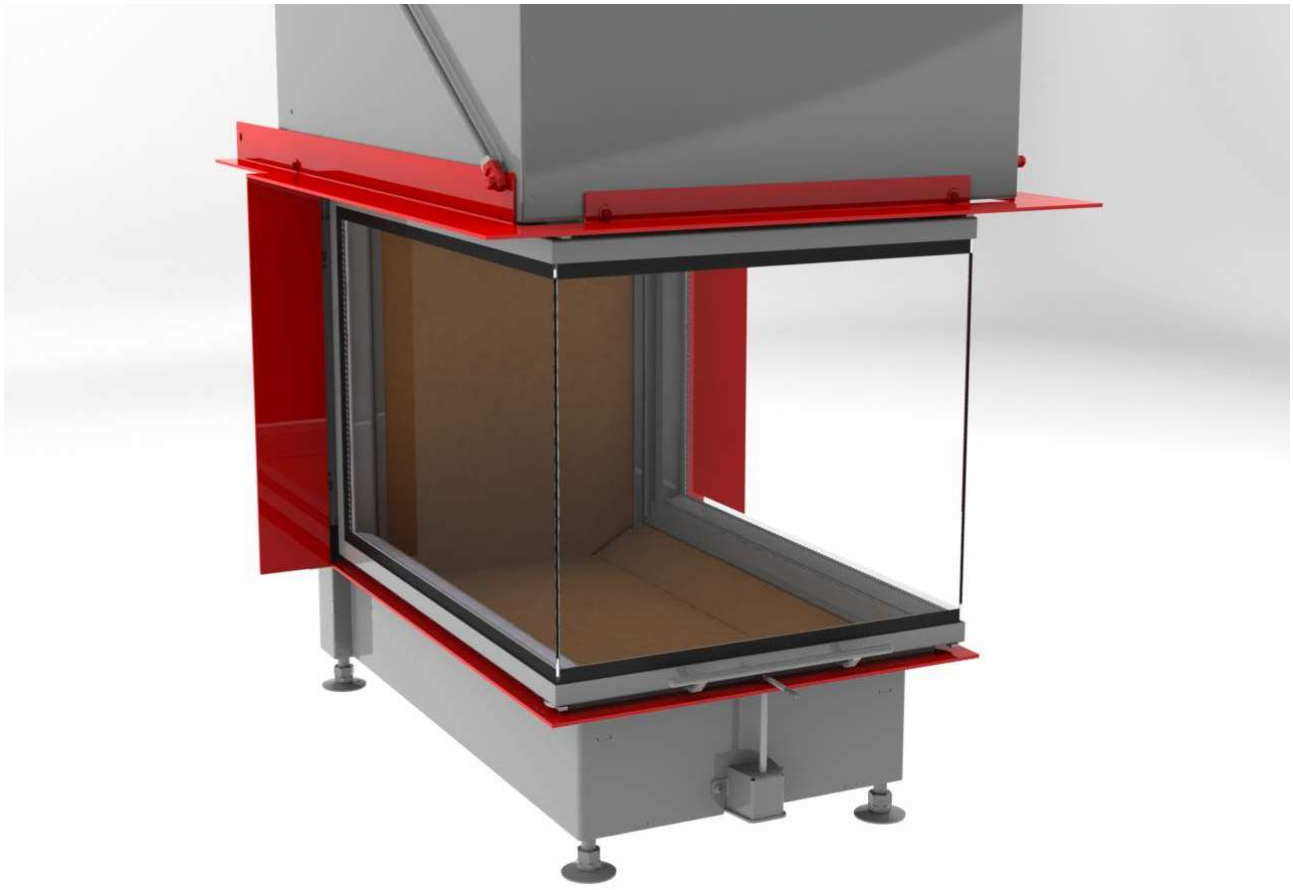

We suggest for CAD planing Palette CAD. Permanent updated drawings: www.brunner.de
Frames / front versions are marked colored.

State: 2018-02-06

Planning and installation - Panorama-Kamin 57/40/60/40 lifting door (easy-lift)

Tested according to		EN 13229 W
Values measured at		Rated capacity
Suitable for all construction types according to rules		OK
EEI		107.2
Data for functional demonstration		
Rated heat power	kW	13
Fire wood volume	kg/h	4.3
Combustion performance	kW	16
Flue gas mass flow	g/s	14
Flue gas temperature after:		
attached steel smoke hood	°C	210
Necessary supply pressure	Pa	12
Combustion air consumption	m^3/h	40
Combustion air connection Ø	mm	160
Heat distribution		
Insert / heat accumulator	%	50 / -
Glass pane (single / double)	%	50 / -
Cross-section of gratings [1]		
Convection air	cm^2	900 / - / -
Warm air	cm^2	900 / - / -
Minimal oven surface for closed construction type		
Heat dissipating surface	m^2	4.2
Minimal distances of the fireplace		
to insulation layer	cm	8
to mounting floor	cm	2
Thermal insulation without / with air gratings [2]		
Mounting wall	cm	14 / 10
Floor	cm	2 / 2
Ceiling	cm	22 / 16
Brick lining for combustible wall	cm	10
Weight		
Fireplace / combustion chamber	kg	196 / 49
Meets requirement/limit values for:		
Germany/ Austria / Suisse / Norway		1.BImSchV (Stufe 2) / 15a BVG (2015) / LRV / NS 3059

1) for fireplace inserts / flue gas pipe / metallic reheating surface
2) Values determined with upper air sections; stove cladding is heat emitting.

Ulrich Brunner GmbH
Zellhuber Ring 17 - 18
D-84307 Eggenfeldern
Telefonat: +49 / (0)87 21 / 7 71-0
Telefax: +49 / (0)87 21 / 7 71-100
info@brunner.de | www.brunner.de

BRUNNER®
made in germany.