TILE STOVE INSERTS FROM BRUNNER



HKD 2.2

State: 2018-05-15



BRUNNER®
made in germany.

Dimension sheets - HKD 2.2

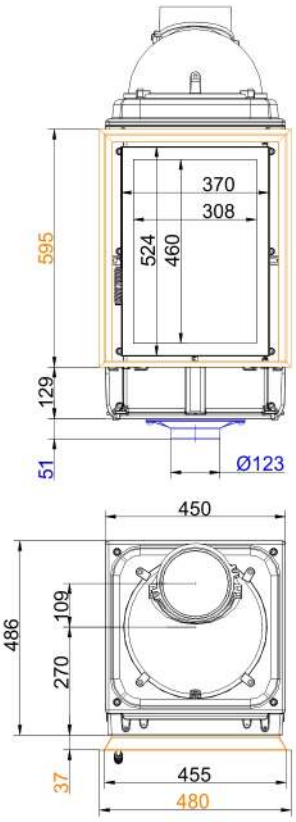

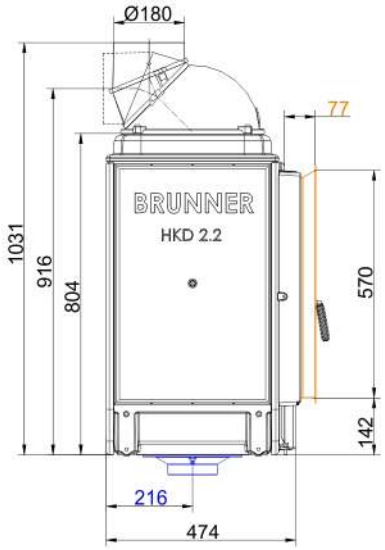

… flat with cast iron dome and steel door frame

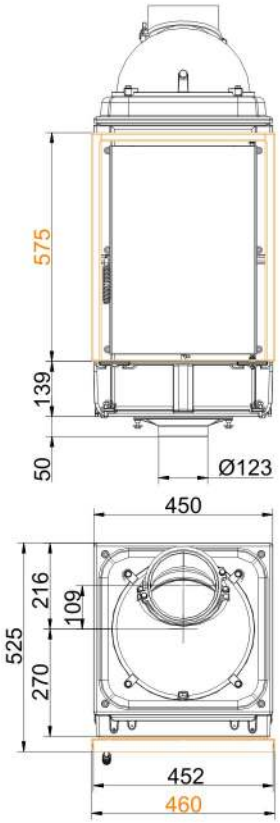

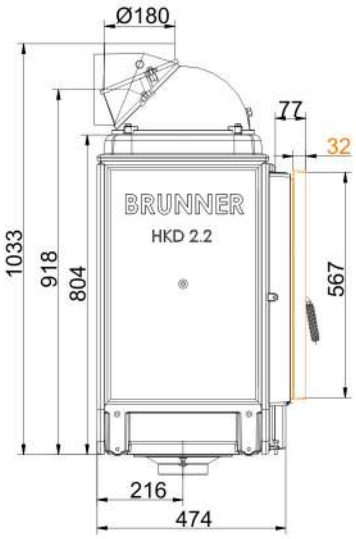

… flat with side opening door and mounting frame

State: 2018-05-15

Dimension sheets - HKD 2.2

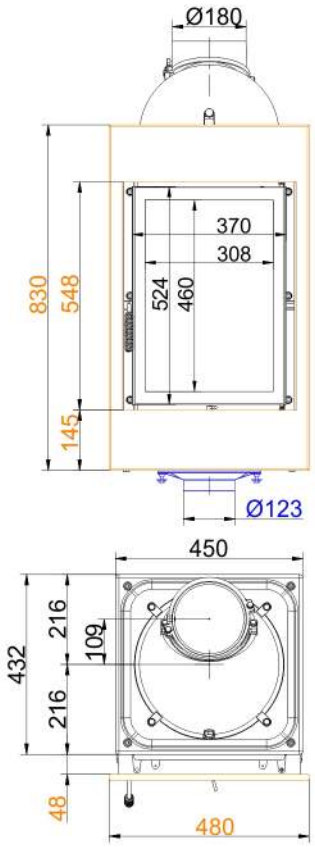

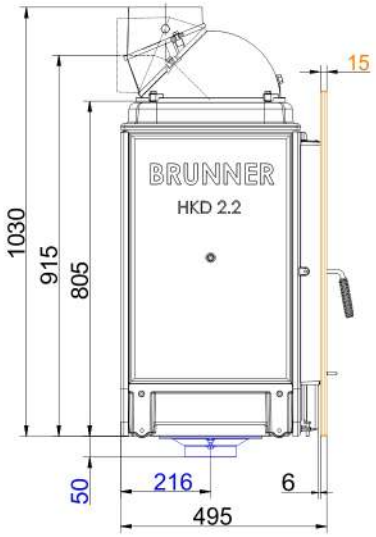

… flat with cast iron dome and steel front plate

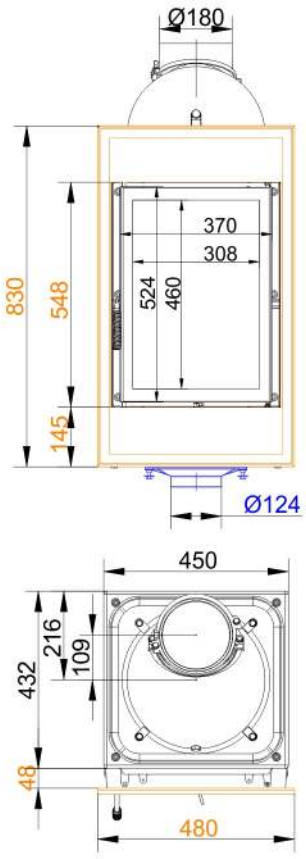

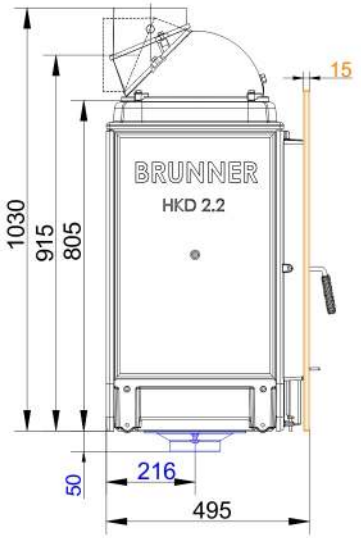

… flat with with cast iron dome and cast iron front plate

State: 2018-05-15

Dimension sheets - HKD 2.2

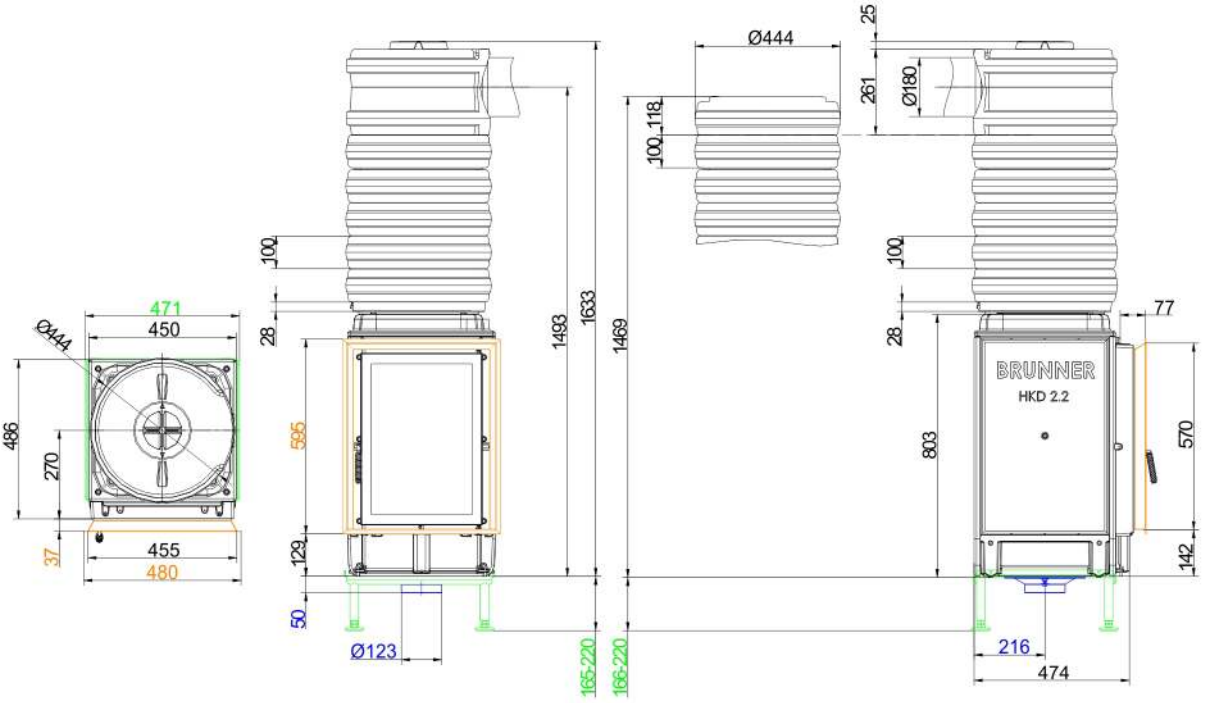

… flat with MAS and steel door frame

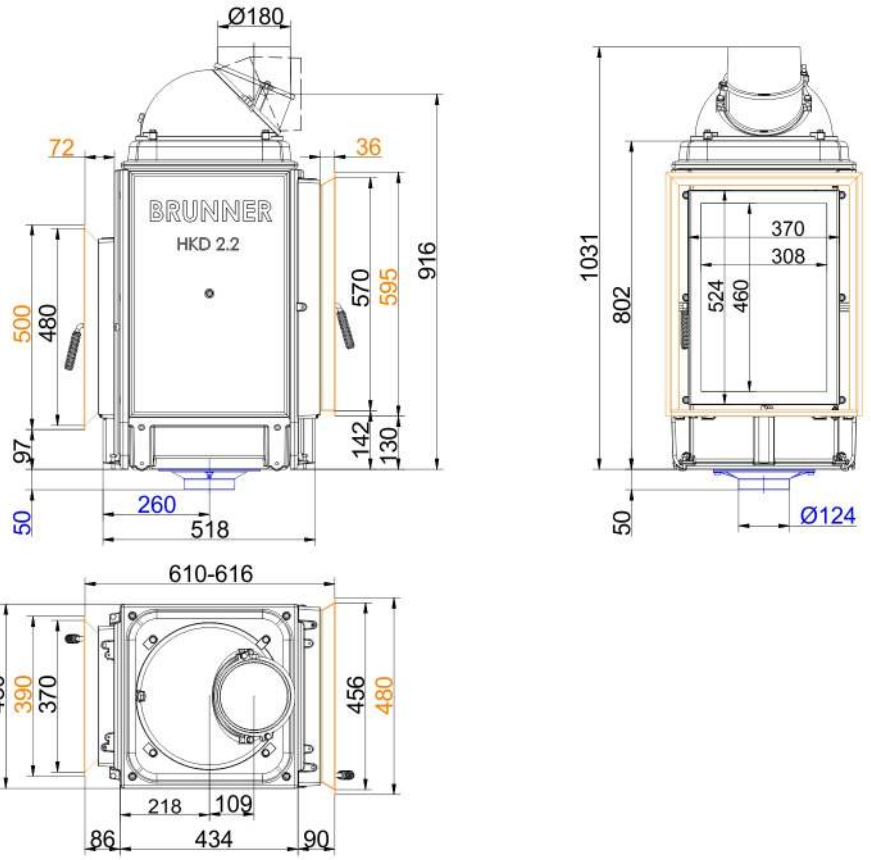

… flat with DHT

State: 2018-05-15

Dimension sheets - HKD 2.2

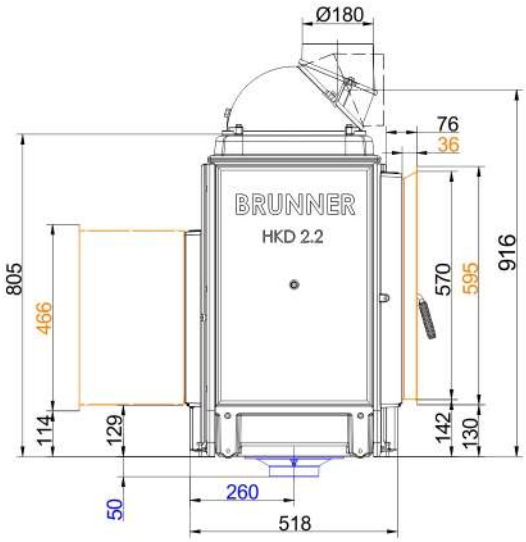

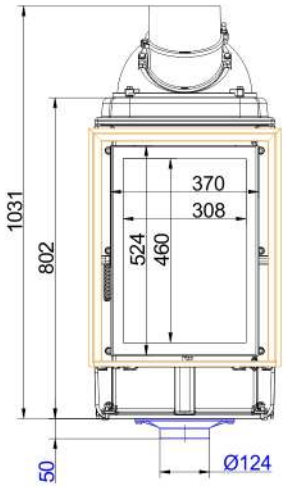

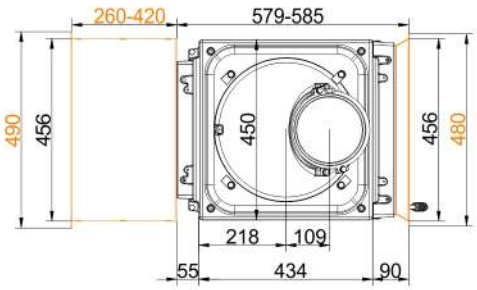

… flat with additional fire door

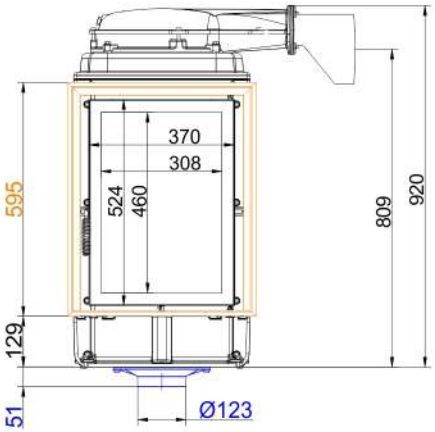

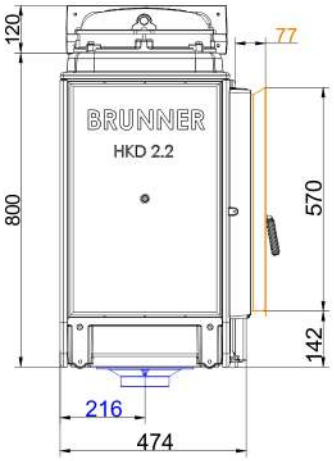

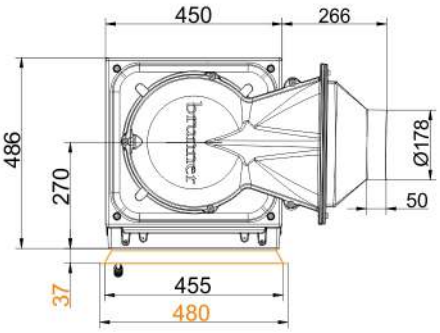

… door frame with lower cast iron dome

State: 2018-05-15

Dimension sheets - HKD 2.2

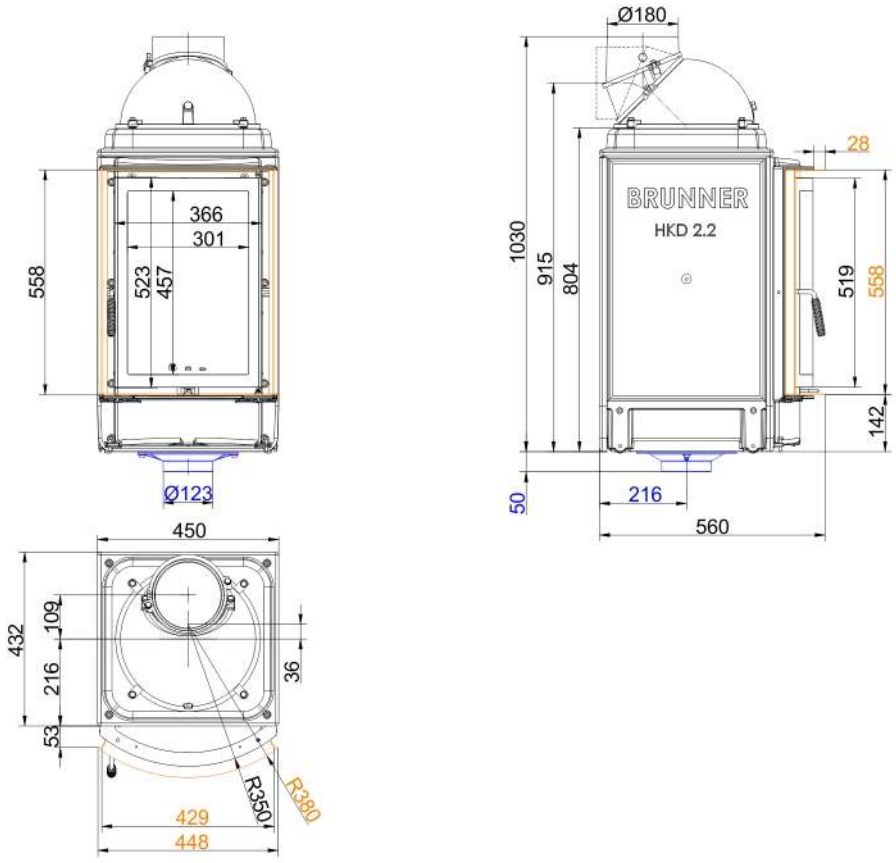

… round with cast iron dome and steel door frame

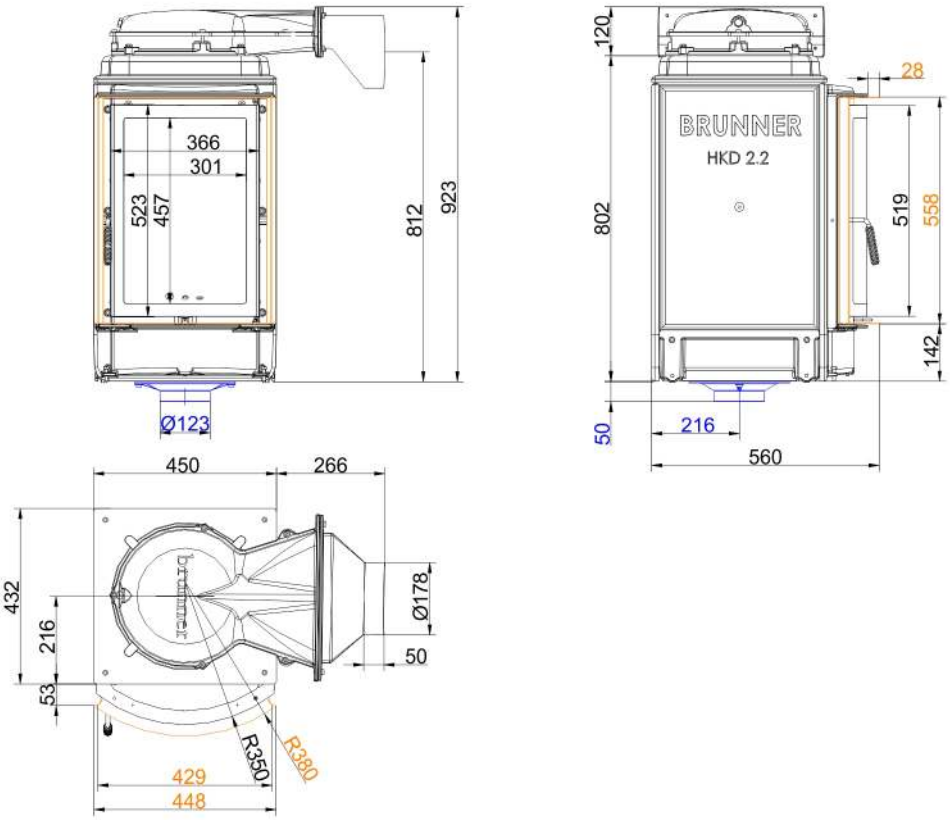

… round with lower cast iron dome, door frame

Dimension sheets - HKD 2.2

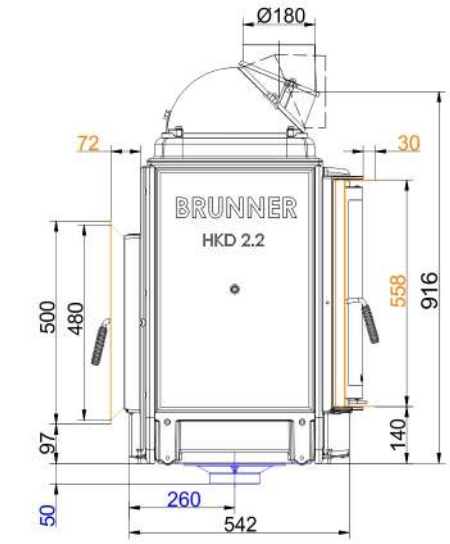

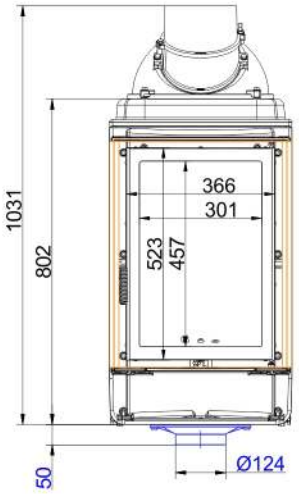

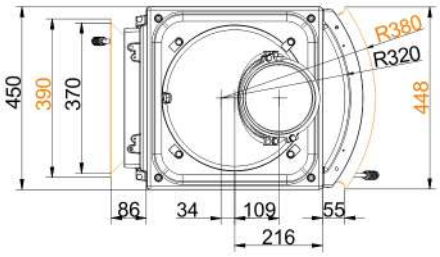

… round with DHT

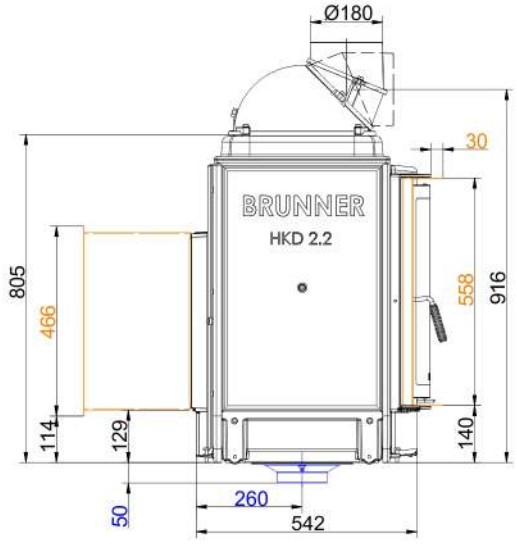

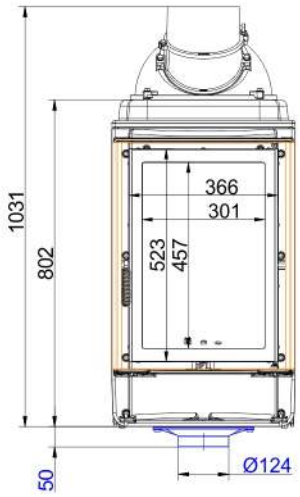

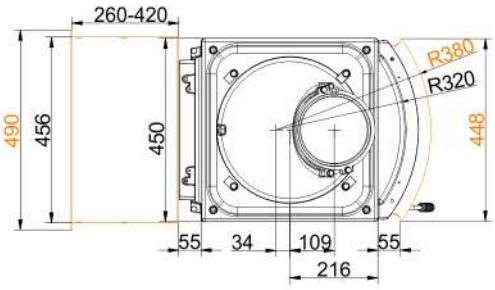

… round with additional fire door

State: 2018-05-15

Dimension sheets - HKD 2.2

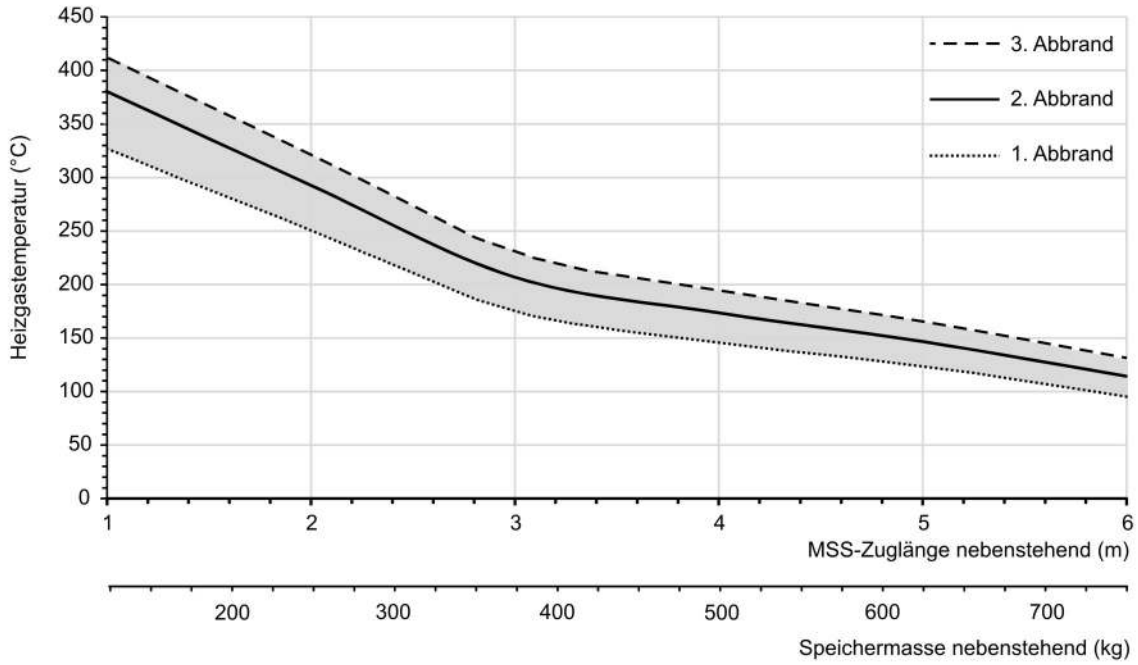

Design characteristics for adjacent storage mass

We suggest for CAD planing Palette CAD. Permanent updated drawings: www.brunner.de
Frames / front versions are marked colored.

State: 2018-05-15

Planning and installation - HKD 2.2

Tested according to		EN 13229 W	EN 13229 WA
Values measured at		Rated capacity	Accumulation
Suitable for all construction types according to rules		OK	OK
EEI		120.1	120.1
Data for functional demonstration			
Rated heat power	kW	9	-
Fire wood volume	kg/h	2.5	4
Combustion performance	kW	11	17
Flue gas mass flow	g/s	7	17
Outlet temperature (before heating surface)	°C	480	520
Flue gas temperature after:			
1 x adjoining cast iron radiator (GNF 8/10)	°C	145	165
6 x accumulation rings (MAS) [1]	°C	220	-
4,1 m ceramic accumulator [2]	°C	-	180
2,8 m accumulation stones (MSS) [2]	°C	-	215
boiler	°C	210	-
Necessary supply pressure	Pa	12	15
Combustion air consumption	m³/h	25	45
Efficiency	%	-	80
Combustion air connection Ø	mm	125	125
Heat distribution			
Insert / heat accumulator	%	45 / 30 - 35	45 / 30 - 35
Glass pane (single / double)	%	25 / 20	25 / 20
Cross-section of gratings [3]			
Convection air	cm²	500 / 250 / 550	500 / 250 / 550
Supply air	cm²	500 / 250 / 550	500 / 250 / 550
Minimal distances of the fireplace			
to insulation layer	cm	6	6
to mounting floor	cm	15	15
Thermal insulation without / with air gratings [4]			
Mounting wall	cm	14 / 10	14 / 10
Floor	cm	0	0
Ceiling	cm	22 / 16	22 / 16
Isolation around the additional door		6	6
Brick lining for combustible wall	cm	10	10
Weight			
Fireplace / combustion chamber	kg	207 / 58	
Meets requirement/limit values for:			
Germany/ Austria / Suisse / Norway		1.BImSchV (Stufe 2) / 15a BVG (2015) / LRV / -	

1) Damper flap recommended
2) Approximate value. Determination according to design characteristics for adjacent storage mass or proof of function provided by calculation
3) for fireplace inserts / flue gas pipe / metallic reheating surface
4) Values determined with upper air sections; stove cladding is heat emitting.

Ulrich Brunner GmbH
Zellhuber Ring 17 - 18
D-84307 Eggenfeldern
Telefonat: +49 / (0)87 21 / 7 71-0
Telefax: +49 / (0)87 21 / 7 71-100
info@brunner.de | www.brunner.de

BRUNNER®
made in germany.