BRUNNER WATER BOILERS



Kompakt-Kessel B4

State: 19.10.2016



BRUNNER®

made in germany

Dimension sheet | **Kompakt-Kessel B4**

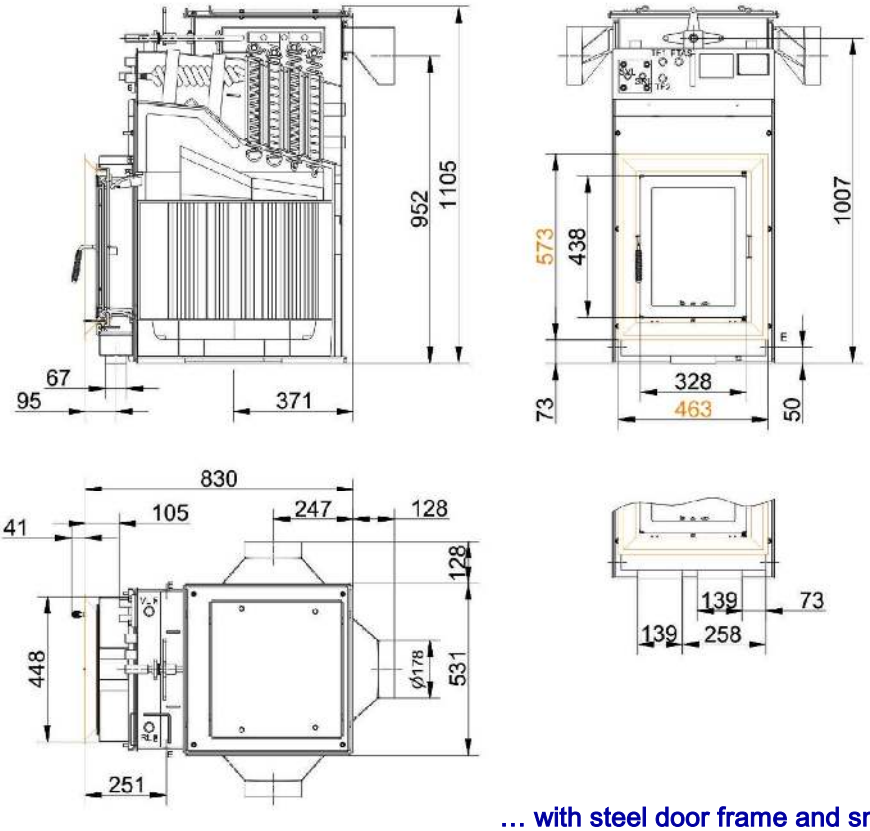

VL	supply 1"
RL	return boiler 1"
E	drain 1/2"
SVL	supply cooling pipe outlet
SRL	return cooling pipe outlet
FTAS	socket for thermometer cooling
TF1	socket 1/2" for thermometer
TF2	socket 1/2" for thermometer

… with steel door frame and smoke pipe adapter, side outlet

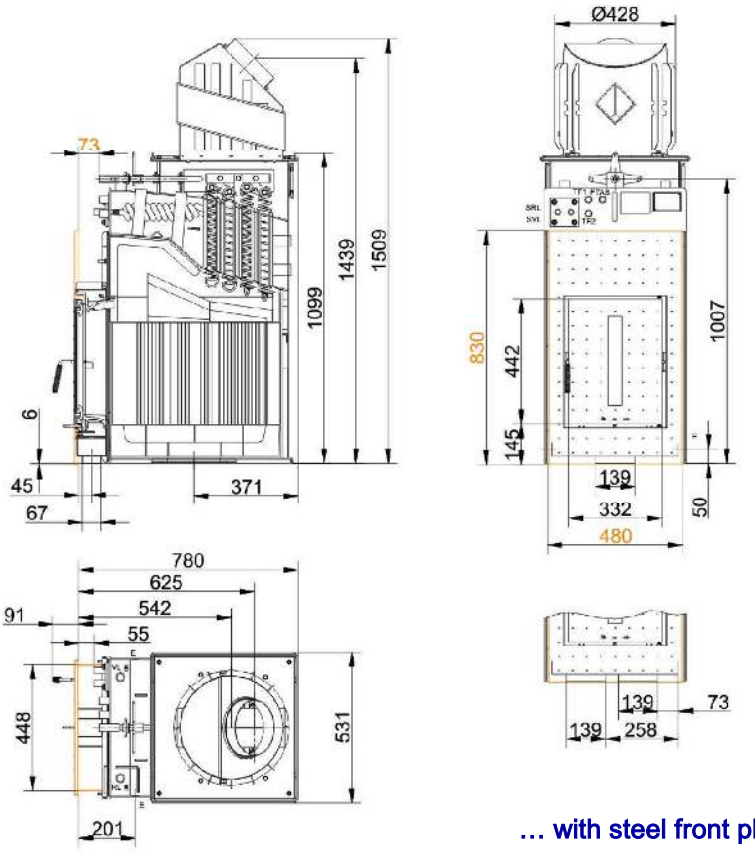

VL	supply 1"
RL	return boiler 1"
E	drain 1/2"
SVL	supply cooling pipe outlet
SRL	return cooling pipe outlet
FTAS	socket for thermometer cooling
TF1	socket 1/2" for thermometer
TF2	socket 1/2" for thermometer

… with steel front plate and power-heat smoke hood

We suggest for CAD planing Palette CAD. Permanent updated drawings: www.brunner.de
Frames / front versions are marked colored.

Dimension sheet | **Kompakt-Kessel B4**

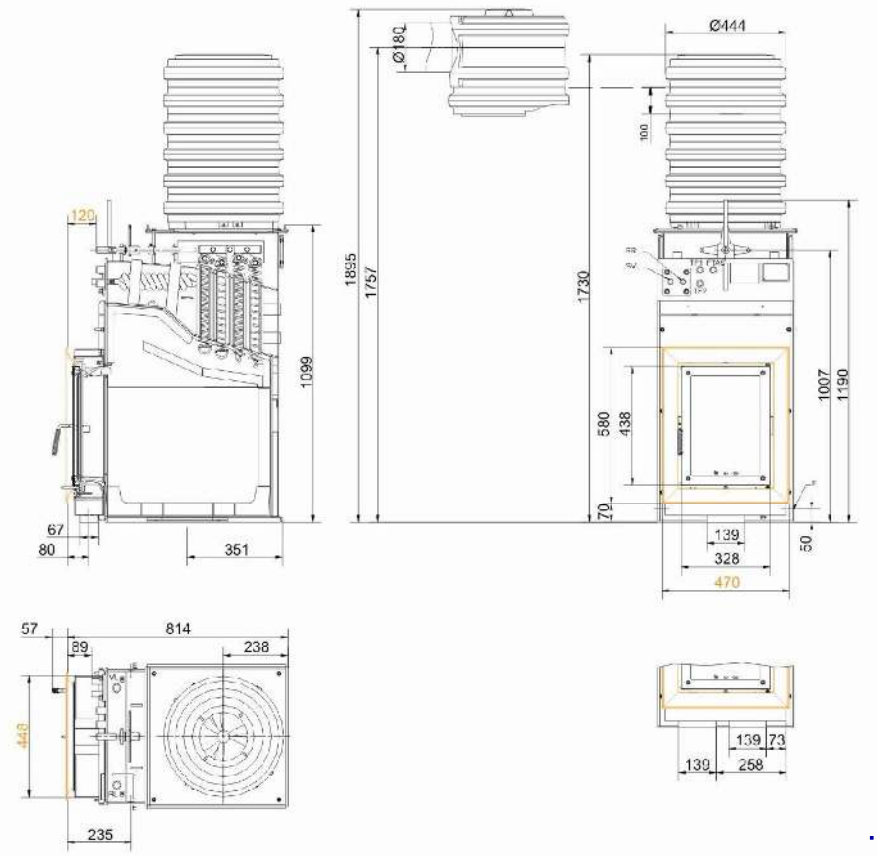

VL	supply 1"
RL	return boiler 1"
E	drain 1/2"
SVL	supply cooling pipe outlet
SRL	return cooling pipe outlet
FTAS	socket for thermometer cooling
TF1	socket 1/2" for thermometer
TF2	socket 1/2" for thermometer

… with cast iron frame and MAS

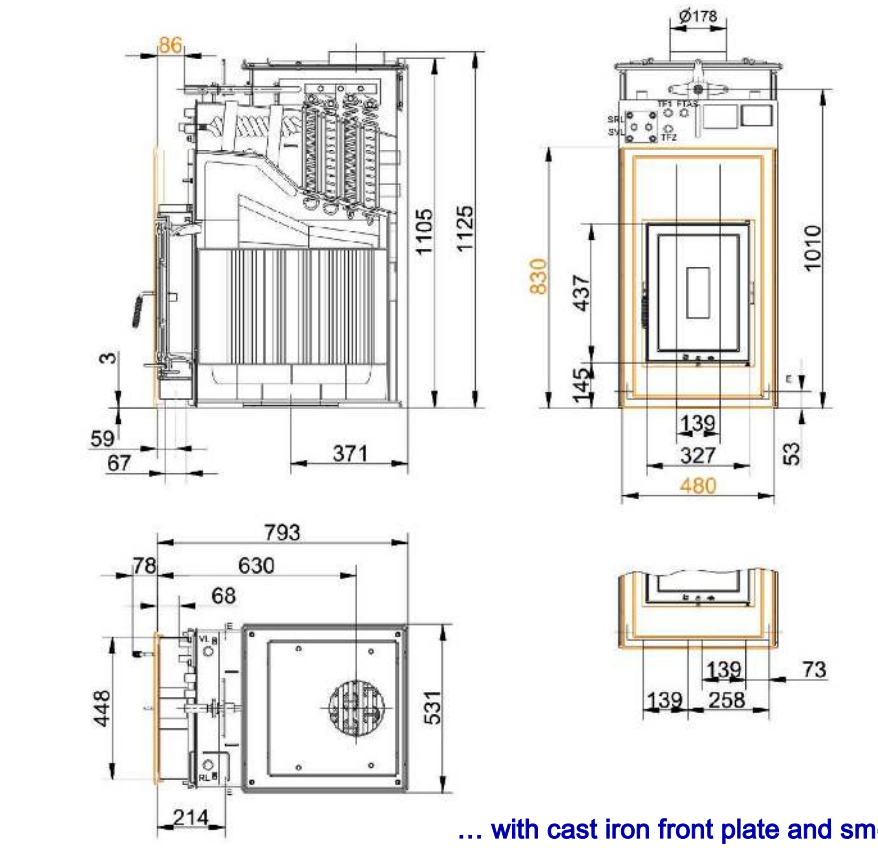

VL	supply 1"
RL	return boiler 1"
E	drain 1/2"
SVL	supply cooling pipe outlet
SRL	return cooling pipe outlet
FTAS	socket for thermometer cooling
TF1	socket 1/2" for thermometer
TF2	socket 1/2" for thermometer

… with cast iron front plate and smoke pipe adapter, vertical outlet

We suggest for CAD planing Palette CAD. Permanent updated drawings: www.brunner.de
Frames / front versions are marked colored.

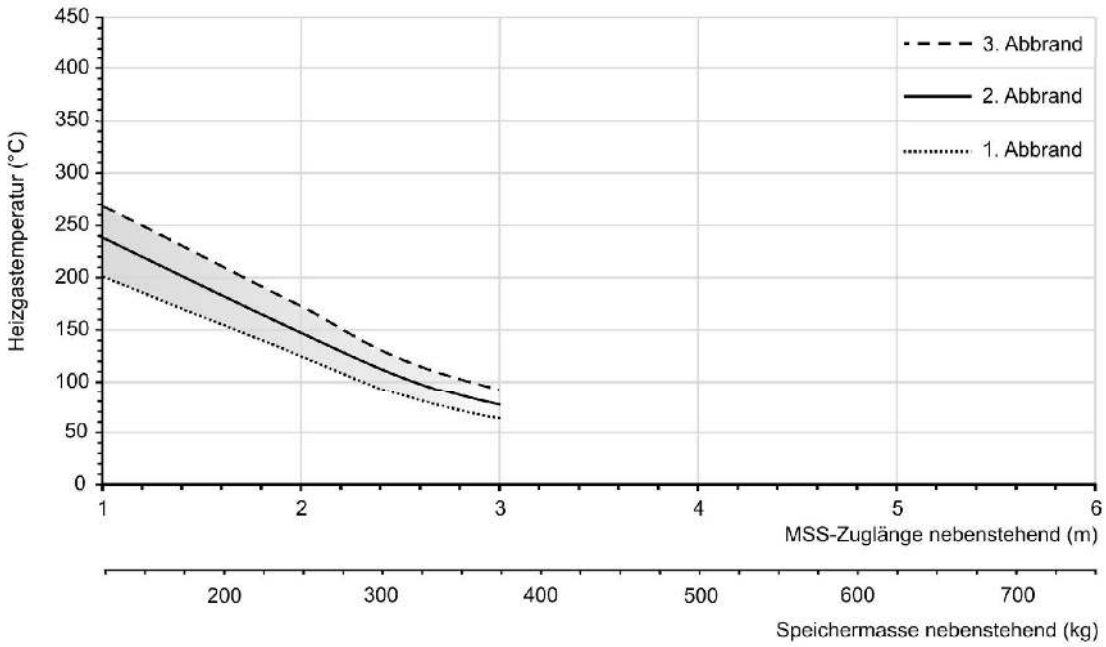

… design characteristics for adjacent storage mass

Planning and installation

Kompakt-Kessel B4

Tested according to Values for mode of operation		EN 13229 W rated load	EN 13229 W practical avg.
Data for functional demonstration			
Rated heat power	kW	14,5	-
Rated heat power	kg/h	3,8	8
Combustion performance	kW	16,5	32
Flue gas mass flow	g/s	14,5	28
Outlet temperature (before heating surface)	°C	210	280
Flue gas temperature after			
attached steel smoke hood	°C	130	210
adjoining cast iron radiator (GNF10)	°C	-	-
6 x accumulation rings (MAS) 1)	°C	125	200
2,5 m adjoining ceramic accumulator 2)	°C	-	180
1,7 m accumulation stones (MSS) 2)	°C	-	180
Boiler	°C	-	-
Necessary supply pressure	Pa	12	15
Combustion air consumption	m³/h	35	80
Combustion air connection Ø	mm	125	125
Heat distribution			
Insert / heating surface	%	10 / 25	10 / 25
Glass (single / double)	%	- / 10	- / 10
Boiler	%	55	55
Vent cross-sections 4)			
Supply air	cm²	200 / 200 / 400	200 / 200 / 400
Warm air	cm²	200 / 200 / 400	200 / 200 / 400
Min. distances of fireplace			
Distance to insulation layer	cm	6	6
Distance to floor	cm	15	15
Heat insulation without / with 3) **air gratings**			
Wall	cm	12 / 8	12 / 8
Floor	cm	0 / 0	0 / 0
Ceiling	cm	25 / 18	25 / 18
Brick lining of protected walls	cm	10	10
Water boiler data			
Max. operating pressure	bar	3	3
Max. flow temperature	°C	100	100
Water volume	litres	71	71
Connections flow / return	inch	1	1
Weight			
Fireplace + burning chamber 5)	kg	243 + 98	
meets requirement limit values for			
Germany / Austria / Switzerland / Norway		1.BImSchV (Stufe 2) / 15a BVG (2015) / - / -	

1) Throttle flap recommended
2) Approximate value. Determination according to design characteristics for adjacent storage mass or proof of function provided
3) Values with air gratings, stove casing is heat conducting
4) for firebox / flue gas pipe / metallic reheating surface
5) heater = body + mounted exchanger

Ulrich Brunner GmbH
Zellhuber Ring 17 -18
D-84307 Eggenfelden
Telefon: +49 / (0)87 21 / 7 71-0
Telefax: +49 / (0)87 21 / 7 71-100
info@brunner.eu | www.brunner.eu

BRUNNER products are offered and sold only by qualified dealers and service centres.
Subject to technical and assortment changes. Errors excepted. (10/16)