TILE STOVE INSERTS FROM BRUNNER



HKD 6.1

State: 2018-05-22



BRUNNER®
made in germany.

Dimension sheets - HKD 6.1

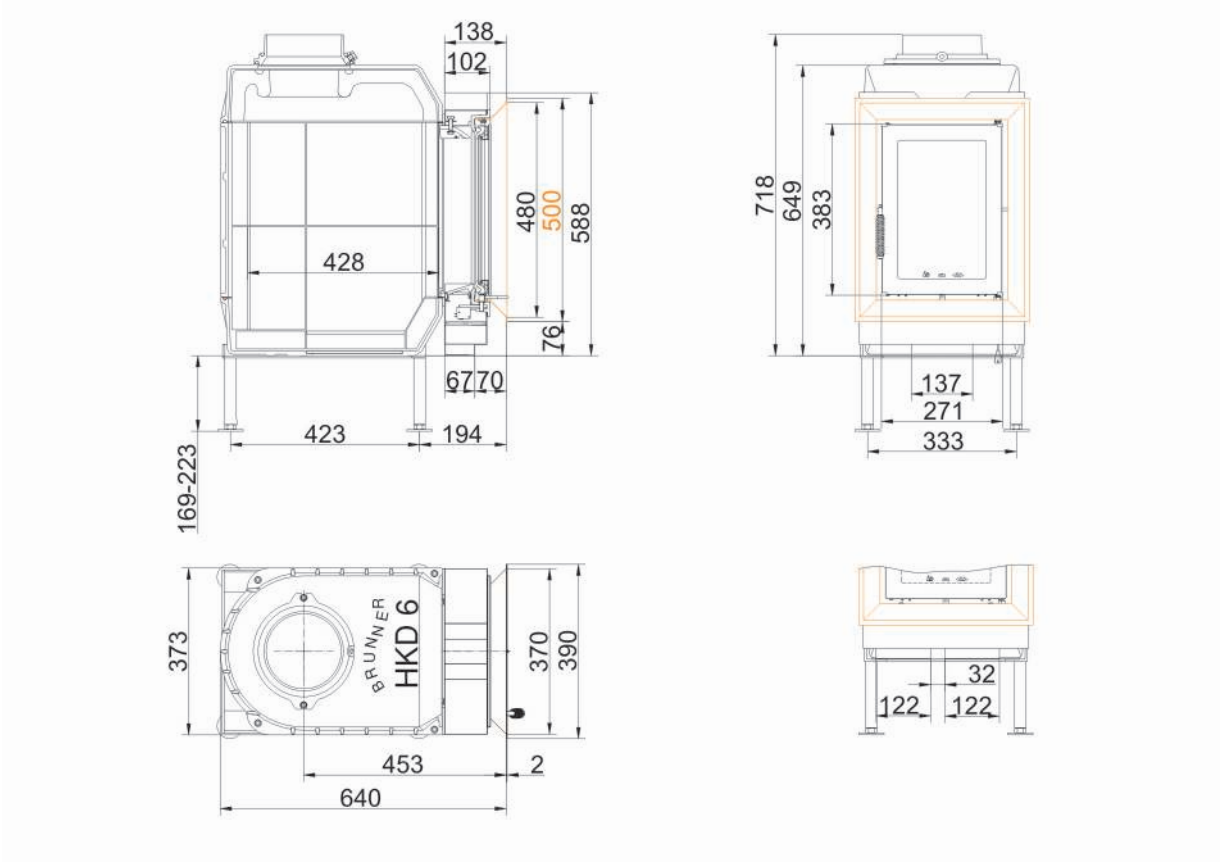

… with steel door frame

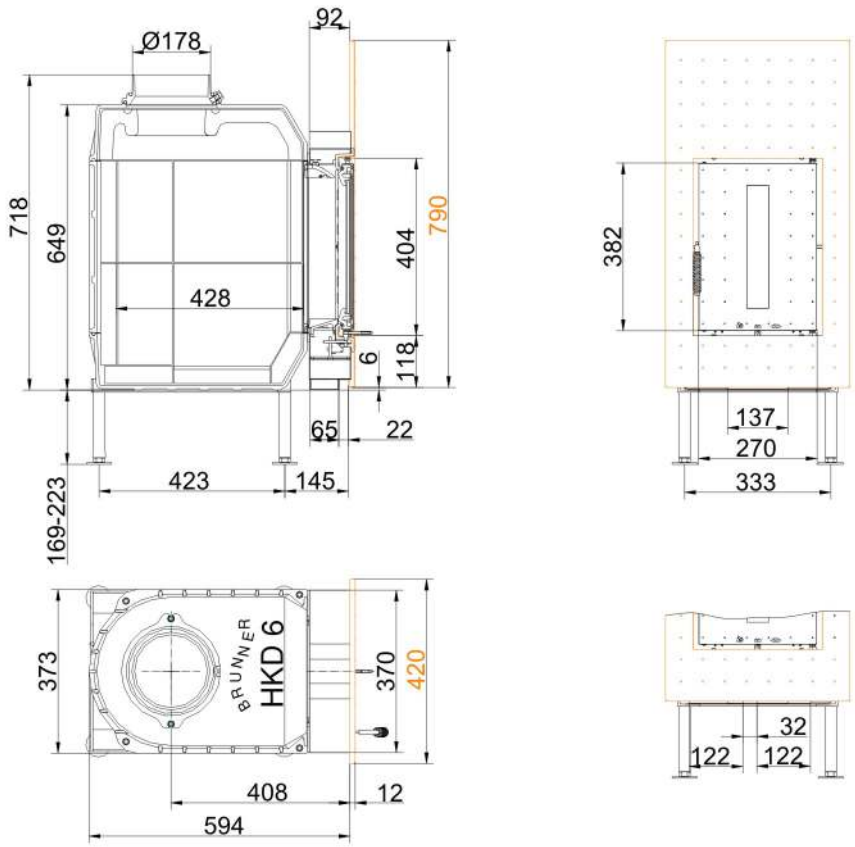

… with steel front plate 790 x 420

State: 2018-05-22

Dimension sheets - HKD 6.1

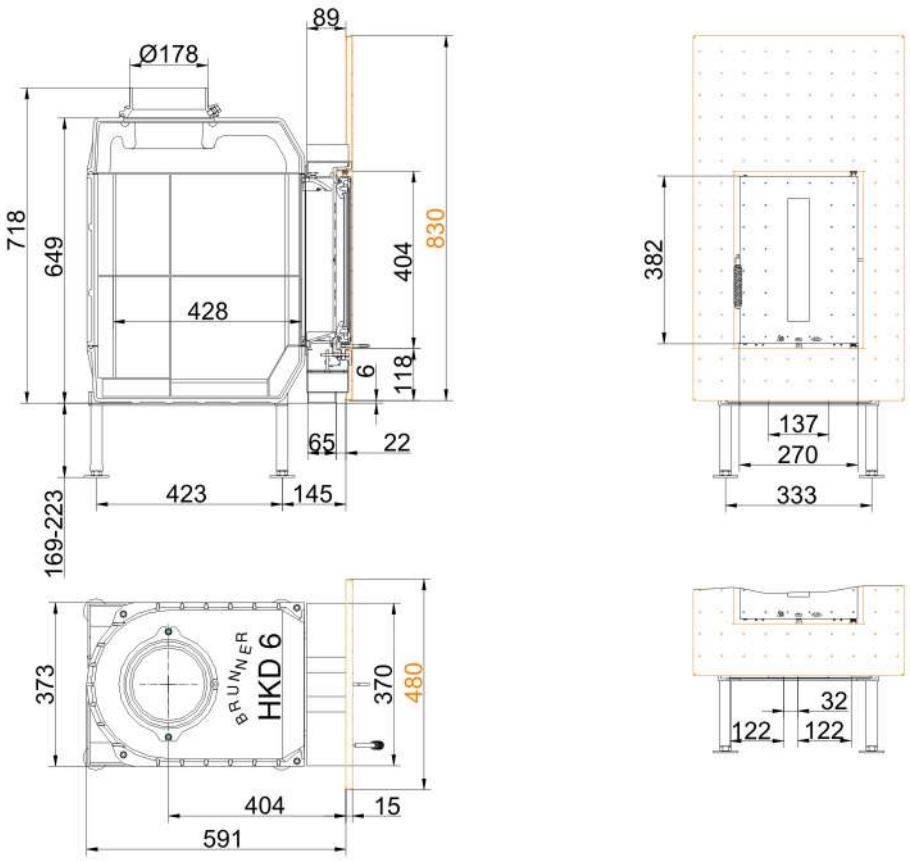

… with steel front plate 830 x 480

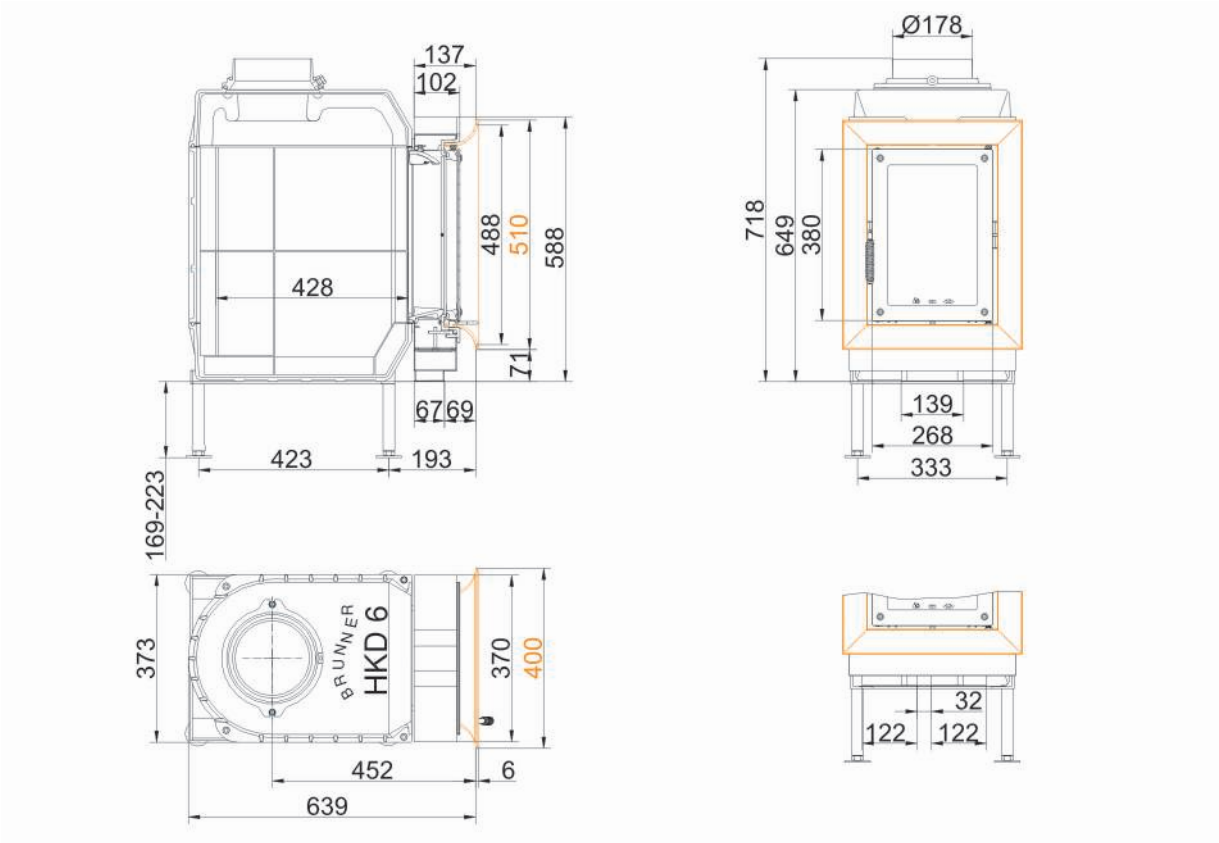

… with cast iron frame

State: 2018-05-22

Dimension sheets - HKD 6.1

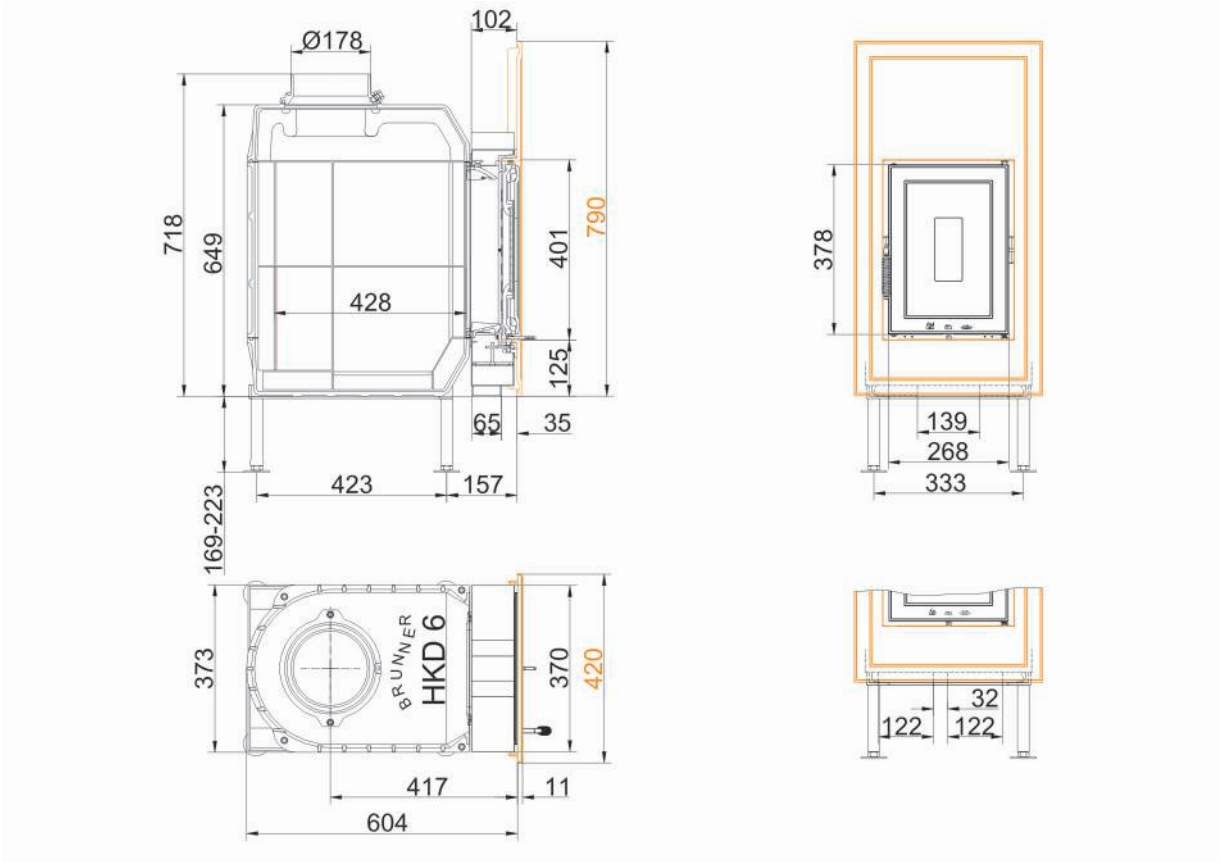

… cast iron front plate 790 x 420

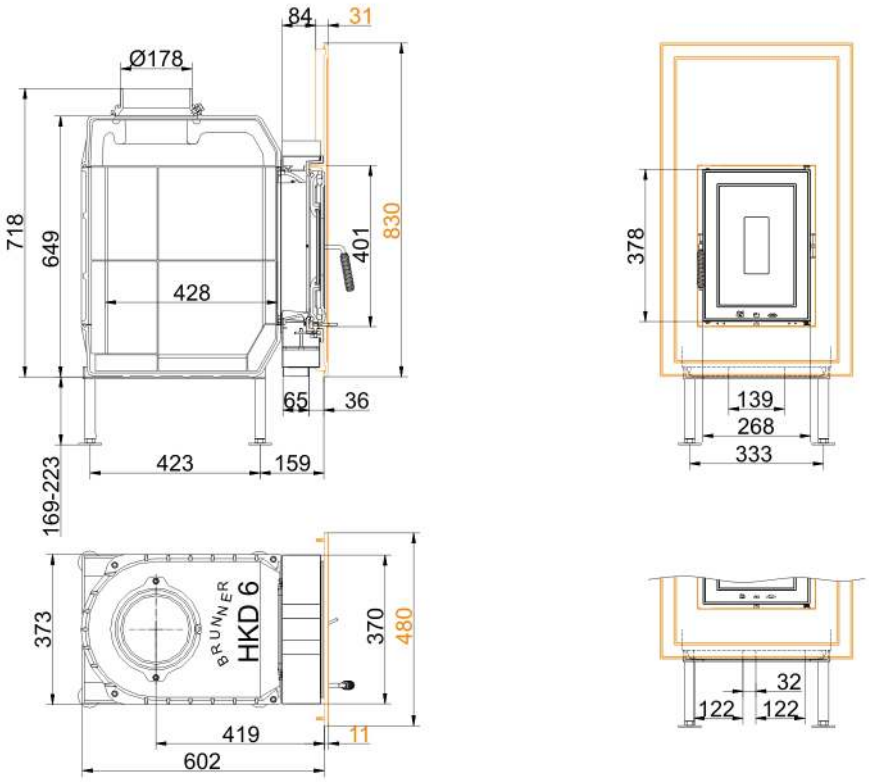

… cast iron front plate 830 X 480

State: 2018-05-22

Dimension sheets - HKD 6.1

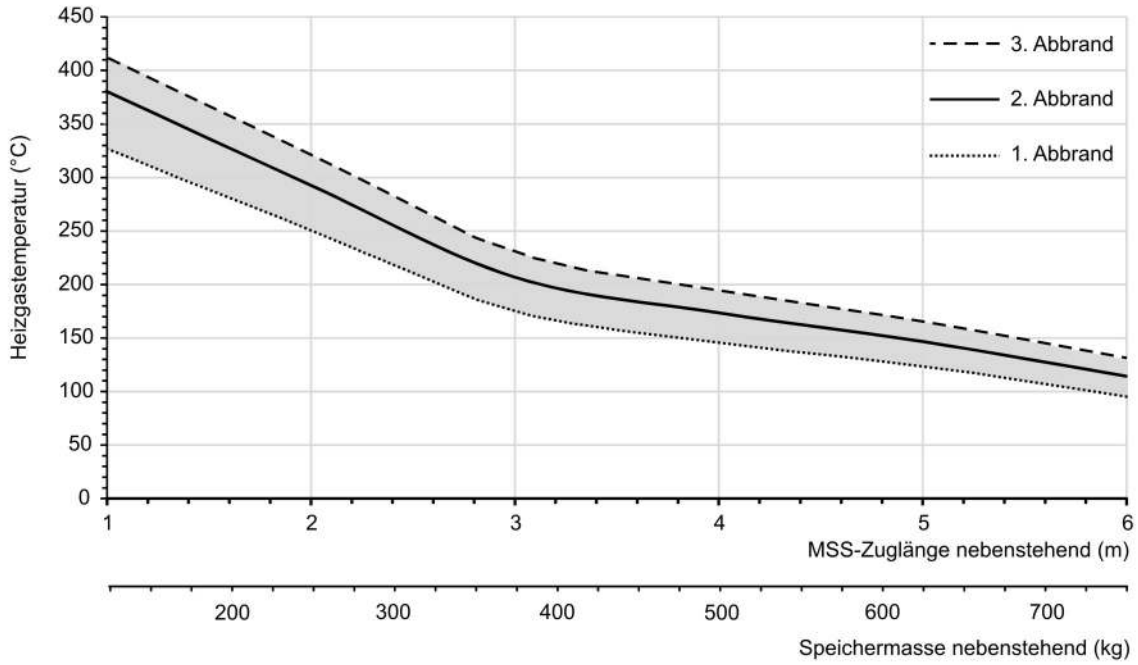

Design characteristics for adjacent storage mass

We suggest for CAD planing Palette CAD. Permanent updated drawings: www.brunner.de
Frames / front versions are marked colored.

State: 2018-05-22

Planning and installation - HKD 6.1

Tested according to		EN 13229 W	EN 13229 WA
Values measured at		Rated capacity	Accumulation
Suitable for all construction types according to rules		OK	OK
EEI		118.7	118.7
Data for functional demonstration			
Rated heat power	kW	9	-
Fire wood volume	kg/h	2.2	4.2
Combustion performance	kW	10	19
Flue gas mass flow	g/s	10	16
Outlet temperature (before heating surface)	°C	510	600
Flue gas temperature after:			
1 x adjoining cast iron radiator (GNF 8/10)	°C	140	170
6 x accumulation rings (MAS) [1]	°C	200	-
4,1 m ceramic accumulator [2]	°C	-	180
2,8 m accumulation stones (MSS) [2]	°C	-	215
Necessary supply pressure	Pa	12	15
Combustion air consumption	m^3/h	30	50
Combustion air connection Ø	mm	125	125
Heat distribution			
Insert / heat accumulator	%	40 / 50	40 / 50
Glass pane (single / double)	%	- / 10	- / 10
Cross-section of gratings [3]			
Convection air	cm^2	400 / 250 / 550	400 / 250 / 550
Supply air	cm^2	400 / 250 / 550	400 / 250 / 550
Minimal distances of the fireplace			
to insulation layer	cm	8	8
to mounting floor	cm	15	15
Thermal insulation without / with air gratings [4]			
Mounting wall	cm	16 / 12	16 / 12
Floor	cm	0	0
Ceiling	cm	28 / 21	28 / 21
Brick lining for combustible wall	cm	10	10
Weight			
Fireplace / combustion chamber	kg	91 / 55	
Meets requirement/limit values for:			
Germany/ Austria / Suisse / Norway		1.BImSchV (Stufe 2) / 15a BVG (2015) / LRV / -	

1) Damper flap recommended
2) Approximate value. Determination according to design characteristics for adjacent storage mass or proof of function provided by calculation
3) for fireplace inserts / flue gas pipe / metallic reheating surface
4) Values determined with upper air sections; stove cladding is heat emitting.

Ulrich Brunner GmbH
Zellhuber Ring 17 - 18
D-84307 Eggenfeldern
Telefonat: +49 / (0)87 21 / 7 71-0
Telefax: +49 / (0)87 21 / 7 71-100
info@brunner.de | www.brunner.de

BRUNNER®
made in germany.