Optiflame

Dimplex

Aspire 30

230V/50Hz | 260 Watt

Experience Better Living





Built In

The Aspire from Dimplex will redefine your electric fire experience with its advanced features, sleek design, and unparalleled customization options. This portrait electric fire offers a contemporary aesthetic which will add a stylish warmth and ambience to any space. Featuring the next generation of Optiflame technology, delivering a realistic electric fire that will ignite all your senses and truly captivate you. With its dancing flames that flicker like real fire and are enhanced by the pulsating and glowing logs, along with the crackling sounds, adding to the authentic fire experience. Aspire is more than just an electric fireplace; it's a statement of modern design and technological prowess. With advanced features and customization, it will make a statement in any home. Whether you're looking to enhance your living room, bedroom, or any other space, the Aspire promises to provide captivating flames and the perfect blend of ambience and warmth.

- **Advanced flame technology** - experience a new generation of patented Optiflame technology, delivering a highly realistic and stunning flame effect.
- **Realistic glowing logs** – features pulsating logs enhanced with inner glow technology that pulse in rhythm with the dancing flames.
- **Crackling sound effects** – enrich the sensory experience of your fireplace with the wood crackling sound.
- **Choice of installation options** – 1, 2 or 3-sided fireplace, the possibilities for customization are endless.
- **Patented Comfort$aver technology** – energy efficient heater offering up to 11% saving on energy costs.
- **Flame Connect App** – change the fire experience to your liking all by the touch of a button.

- One-sided decorative fireplace. Trim kit accessory available to make the fire 2 or 3 sided.
- Flames rising over a highly realistic glowing fire bed.
- New generation Optiflame technology, calming flames above the colourful glow bed.
- Flames and lamps use energy-efficient LEDs that require no maintenance and can burn separately.
- Comes as standard with a Lighted logset and tumbled glass.
- Ability to switch between glow bed colours.
- Colour alternating flame effects.
- Powerful fan-assisted heating by safe element that provides additional heating on demand.
- Control all functions of the fireplace from the comfort of your chair.
- 7 Day Programmable Timer.

Optiflame

Dimplex

Aspire 30

230V/50Hz | 260 Watt

Experience Better Living

Unit Dimensions

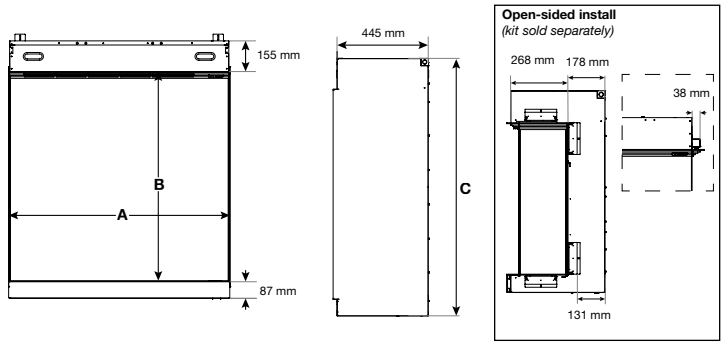

DIMENSIONS			
	Width (cm) A	Height (cm) C	Depth (cm)
Aspire 30	77,7	95,3	44,5

Specifications

Flame Effect system	Optiflame®
Model number	500003542
GTIN/UPC	5011139088161
Model	Built-in
View Type	Front
Colour - Furniture	Black
Media Bed	Lighted Logs & tumbled glass
Viewing window WxH (cm)	76,2x71,1
Build in dim (WxHxD) (cm)	77,7x95,3x44,5
Heating function	Yes
Heating Element	Yes
Remote Control	Yes
Manual Operation on the fireplace possible	Yes
Lighting Module	LED
Sound	Yes
Media Bed Flame Colours	Yes
Heat Setting 1 in Watts	1000
Heat Setting 2 in Watts	2000
Power consumption (flame effect) (Watt)	24
Wattage	2000
Voltage	230V/50Hz
Unpacked Weight (kg)	40
Plug Length	1 m
Warranty	2 Years

Disclaimer We have compiled this publication with the utmost care. The information in this publication can be shown inaccurately, may have been changed or supplemented. This publication can be changed. Glen Dimplex is not responsible for the action taken, decisions of results based solely on the information contained in this publication.