BRUNNER FIREPLACES





Kompakt-Kamin 51/55
flat
side-opening door

State: 2018-01-29

BRUNNER®
made in germany.

Dimension sheets - Kompakt-Kamin 51/55 flat side-opening door

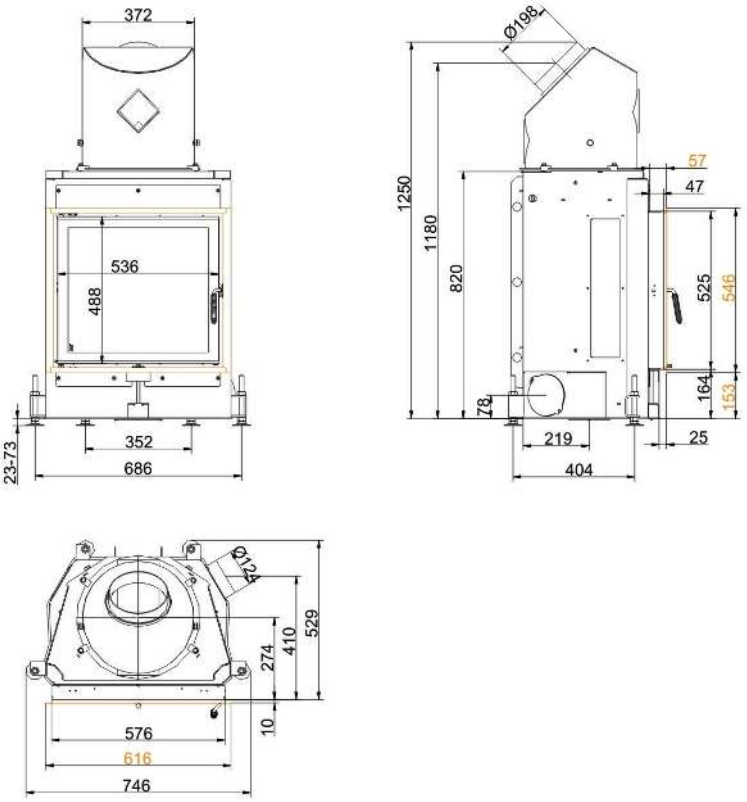

… with steel smoke hood

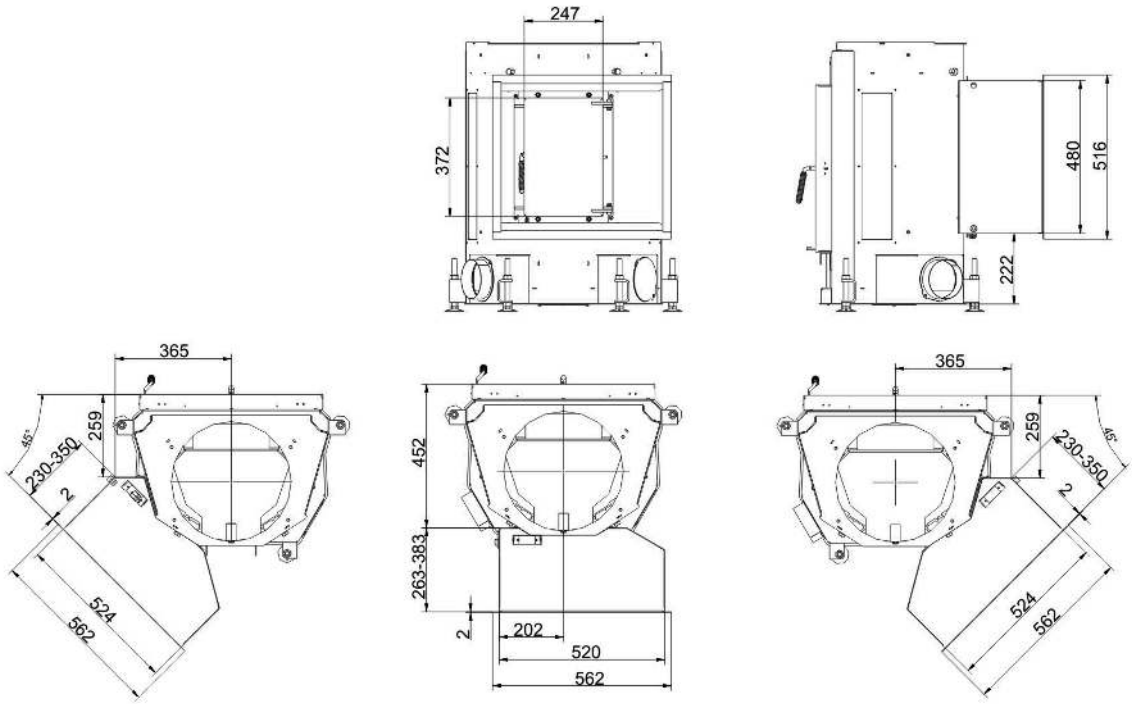

… with additional fire door

We suggest for CAD planing Palette CAD. Permanent updated drawings: www.brunner.de
Frames / front versions are marked colored.

Planning and installation - Kompakt-Kamin 51/55 flat side-opening door

Tested according to		EN 13229 W	EN 13229 WA
Values measured at		Rated capacity	Accumulation
Suitable for all construction types according to rules		OK	OK
EEI		108.5	108.5
Data for functional demonstration			
Rated heat power	kW	8	-
Fire wood volume	kg/h	2.5	4
Combustion performance	kW	10	17
Flue gas mass flow	g/s	8.5	20
Outlet temperature (before heating surface)	°C	-	340
Flue gas temperature after:			
attached steel smoke hood	°C	225	-
1 x adjoining cast iron radiator (GNF 8/10)	°C	-	160
6 x accumulation rings (MAS) [1]	°C	-	205
2 m ceramic accumulator [2]	°C	-	180
1,4 m accumulation stones (MSS) [2]	°C	-	180
boiler	°C	-	208
Necessary supply pressure	Pa	12	13
Combustion air consumption	m^3/h	35	35
Combustion air connection Ø	mm	125	125
Heat distribution			
Insert / heat accumulator	%	30 / 30	30 / 30
Glass pane (single / double)	%	40 / -	40 / -
Boiler		-	30
Cross-section of gratings [3]			
Supply air	cm^2	400 / 100 / -	300 / 100 / 300
Warm air	cm^2	400 / 100 / -	300 / 100 / 300
Minimal oven surface for closed construction type			
Heat dissipating surface	m^2	3.8	3.8
Minimal distances of the fireplace			
to insulation layer	cm	8	8
to mounting floor	cm	2	2
Thermal insulation without / with air gratings [4]			
Mounting wall	cm	12 / 9	14 / 10
Floor	cm	4 / 2	4 / 2
Ceiling	cm	14 / 10	20 / 14
Isolation around the additional door		6	6
Brick lining for combustible wall	cm	10	10
Weight			
Fireplace / combustion room	kg	112 / 69	
Meets requirement/limit values for:			
Germany/ Austria / Suisse / Norway		1.BImSchV (Stufe 2) / 15a BVG (2015) / LRV / NS 3059	

1) Damper flap recommended
2) Approximate value. Proof of function provided by calculation required
3) for fireplace inserts / flue gas pipe / metallic reheating surface
4) Values determined with upper air sections; stove cladding is heat emitting.

Ulrich Brunner GmbH
Zellhuber Ring 17 - 18
D-84307 Eggenfeldern
Telefonat: +49 / (0)87 21 / 7 71-0
Telefax: +49 / (0)87 21 / 7 71-100
info@brunner.de | www.brunner.de

BRUNNER®
made in germany.