Wood burning heater Harvia 50 black

WK500

The Harvia 50 wood burning heater is the king of public saunas, designed to provide ample steam for large groups of bathers. The great amount of stones guarantees even heat in a large sauna. The steam given off by the wood burning heater contains the age-old spirit of the Finnish sauna tradition.



Features

Main material : Steel

H x W x D : 1050.0 x 510.0 x 720.0 mm

Net weight (kg) : 194.2

Stone amount (kg) : 120.0

ID	GTIN	Power	Sauna room size min - max m3
WK500	6417659001069	40 kW	20.0-50.0



Spare parts

Product	ID	Pcs
Furnace grate	ZKIP-10	1
Outer casing Harvia 50	ZH50-130	
Stove door with glass Harvia 50	ZH50-210	
Cast-iron grating 135x290mm, sauna heaters	SPZKIP-10	

Technical details

Technical data	Type / attribute	WK500
	Color	Black
	Power output	40 kW
	Stone amount (kg)	120
Dimensions	Product width	510
	Product height	1050
	Product depth (mm)	720
	Net weight (kg)	194.2
	Gross weight	194.2
	Package width	800
	Package height	1240
	Package depth	1200
Connections	Flue connection locations	Back, Top
	Chimney connection diameter	140
Safety and installation dimensions	Safety distance front (non-combustible materials)	500
	Safety distance front (combustible materials)	500
	Safety distance right side (combustible materials)	500
	Safety distance right side non-combustible materials	100
	Safety distance left side (combustible materials)	500
	Safety distance left side non-combustible materials	100
	Safety distance behind (non-combustible materials)	100
	Safety distance behind (combustible materials)	500
	Safety distance (Ceiling)	1200
	Room min. height(depends on connections and therefore from output, star/delta)	2250

Technical images

1.2. Stove Parts
A. Upper connection opening
B. Rear connection opening
C. Soot opening
D. Stove door
E. Ash box

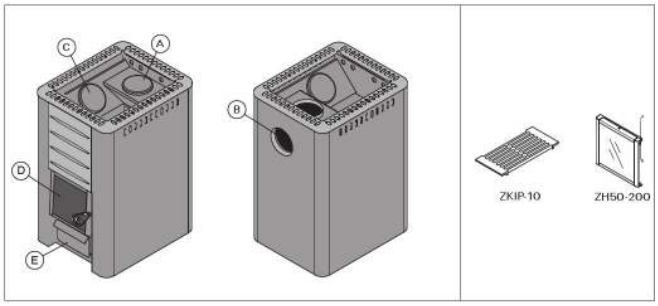

Stove parts

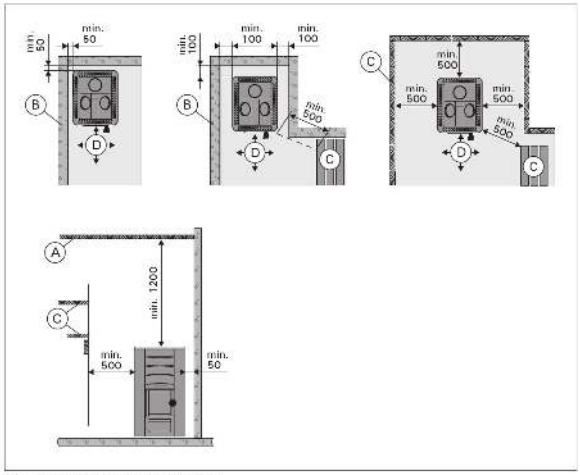

Safety distances (all dimensions in millimeters)

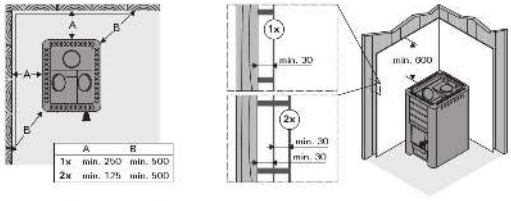

Protective covers (all dimensions in millimeters)