Optiflame

Dimplex

Ignite Ultra 40 | 50 | 60 | 74

230V/50Hz | 30 / 36 / 43 / 51 Watt



Built In

The Ignite Ultra is the latest innovation from Dimplex combining cutting edge technology with an elegant modern design for a true state-of-the-art electric fire which will transform any home. This stylish fire boasts the next generation of Optiflame technology, delivering a realistic electric fire that will ignite all your senses and truly captivate you. The Ignite Ultra's flames dance and flicker like real fire and are enhanced by the pulsating and glowing logs, along with the crackling sounds, adding to the authentic fire experience. The large viewing window of 43,2 cm allows you to enjoy the enchanting flames, which create a stunning fireside glow and add warmth and atmosphere to any room. Available in a choice of sizes you can choose from three layout options: a single glass panel for a striking front-facing fire, two panels for a dynamic corner installation, or three panels for a truly panoramic effect. Dimplex's Comfort$aver technology ensures energy-efficient heating, reducing power consumption without compromising warmth and comfort.

- **Advanced flame technology** - experience a new generation of patented Optiflame technology, delivering a highly realistic and stunning flame effect
- **Realistic glowing logs** – features pulsating logs enhanced with inner glow technology that pulse in rhythm with the dancing flames
- **Crackling sound effects** – enrich the sensory experience of your fireplace with the wood crackling sound
- **Choice of installation options** – 1, 2 or 3-sided fireplace, the possibilities for customization are endless
- **Patented Comfort$aver technology** – energy efficient heater offering up to 11% saving on energy costs
- **Flame Connect App** – change the fire experience to your liking all by the touch of a button

Experience Better Living

Ignite Ultra 40



Ignite Ultra 74



- 3 installation options. Can be built in as a 1, 2 or 3-sided fireplace.
- Possibility to connect multiple units together.
- Flames rising over a highly realistic glowing fire bed.
- New generation Optiflame technology, calming flames above the colourful glow bed.
- Flames and lamps use energy-efficient LEDs that require no maintenance and can burn separately.
- Comes as standard with a Lighted logset and tumbled glass.
- Ability to switch between glow bed colours.
- Colour alternating flame effects.
- Powerful fan-assisted heating by safe element that provides additional heating on demand.
- Flame Connect app available for smartphone.
- Energy-efficient heating, delivering up to 11% energy savings.

Optiflame

Dimplex

Ignite Ultra 40 | 50 | 60 | 74

230V/50Hz | 30 / 36 / 43 / 51 Watt

Experience Better Living

Unit Dimensions

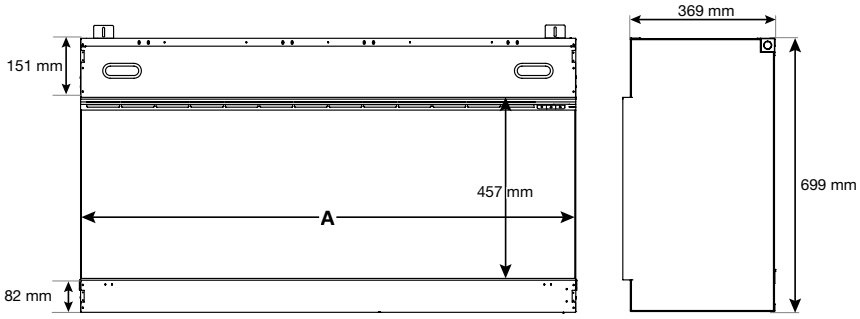

MODEL	A
Ignite Ultra 40	103,1 cm
Ignite Ultra 50	128,5 cm
Ignite Ultra 60	153,9 cm
Ignite Ultra 74	189,5 cm

Specifications

	Ignite Ultra 40	Ignite Ultra 50	Ignite Ultra 60	Ignite Ultra 74
Flame Effect system	Optiflame®	Optiflame®	Optiflame®	Optiflame®
Model number	500003543	500003544	500003545	500003546
GTIN/UPC	5011139088208	5011139088215	5011139088222	5011139088239
Model	Built-in	Built-in	Built-in	Built-in
View Type	1-, 2-, or 3-sided	1-, 2-, or 3-sided	1-, 2-, or 3-sided	1-, 2-, or 3-sided
Colour - Furniture	Black	Black	Black	Black
Media Bed	Lighted Logs & tumbled glass	Lighted Logs & tumbled glass	Lighted Logs & tumbled glass	Lighted Logs & tumbled glass
Viewing window WxH (cm)	101,6x45,7	127x45,7	152,4x45,7	188x45,7
Build in dim (WxHxD) (cm)	103,1x69,9x36,9	128,5x69,9x36,9	153,9x69,9x36,9	189,5x69,9x36,9
Heating function	Yes	Yes	Yes	Yes
Heating Element	Yes	Yes	Yes	Yes
Remote Control	Yes	Yes	Yes	Yes
Manual Operation on the fireplace possible	Yes	Yes	Yes	Yes
Lighting Module	LED	LED	LED	LED
Sound	Yes	Yes	Yes	Yes
Media Bed Flame Colours	Yes	Yes	Yes	Yes
Heat Setting 1 in Watts	1000	1000	1000	1000
Heat Setting 2 in Watts	2000	2000	2000	2000
Power consumption (flame effect) (Watt)	30	36	43	51
Wattage	2000	2000	2000	2000
Voltage	230V/50Hz	230V/50Hz	230V/50Hz	230V/50Hz
Unpacked Weight (kg)	29,9	37,3	44,8	55,2
Plug Length	1 m	1 m	1 m	1 m
Warranty	2 Years	2 Years	2 Years	2 Years

Disclaimer We have compiled this publication with the utmost care. The information in this publication can be shown inaccurately, may have been changed or supplemented. This publication can be changed. Glen Dimplex is not responsible for the action taken, decisions of results based solely on the information contained in this publication.