# Wood burning heater Harvia Pro 20 Duo Steel

WK200SLUX

*The Harvia 20 Duo wood burning heater is a unique 2-in-1 solution that combines a wood burning heater and a fireplace. Heating up the stove lets you enjoy the atmosphere in two rooms.*



## Features

Main material : Steel

H x W x D : 760.0 x 430.0 x 510.0 mm

Net weight (kg) : 76.5

Stone amount (kg) : 40.0

| ID | GTIN | Power | Sauna room size min - max m3 |
|---|---|---|---|
| WK200SLUX | 6417659001137 | 24.1 kW | 8.0-20.0 |




## Spare parts

| Product | ID | Pcs |
|---|---|---|
| Stainless steel frame for Duo-stoves | WX044 | 1 |
| Furnace grate | ZKIP-10 | 1 |
| Stove body 20 SL Duo | ZROST-300LUX | 1 |
| Pallet 600x800 | KP600 | |
| Harvia mark | ZH1-170 | |
| Handle for ash box | ZKIP-680 | |
| Air flow spoiler Pro 2019 | ZROST-601 | 1 |
| Stove sticker number 1 | ZTA-900 | |
| Adjustable legs for LG150/SL | SPZKIP-918 | |
| Hinge pin | SPZKIP-50 | |
| Stainless steel frame for Duo-stoves | SP044 | |
| Handle for Duo stoves door | SP095 | |
| Air flow spoiler Pro 2019 | SPZROST-601 | |
| Cap for smoke hole (Ø 50 mm) | SPZKIP-170 | |
| Ash box, Duo-series | SP096 | |
| Cast-iron grating 135x290mm, sauna heaters | SPZKIP-10 | |

## Technical details

| Technical data | Type / attribute | WK200SLUX |
|---|---|---|
| | Color | Black |
| | Power output | 24.1 kW |
| | Stone amount (kg) | 40 |
| **Dimensions** | Product width | 430 |
| | Product height | 760 |
| | Product depth (mm) | 510 |
| | Net weight (kg) | 76.5 |
| | Gross weight | 85 |
| | Package width | 805 |
| | Package height | 860 |
| | Package depth | 620 |
| **Connections** | Flue connection locations | Top |
| | Chimney connection diameter | 115 |
| **Safety and installation dimensions** | Safety distance front (non-combustible materials) | 300 |
| | Safety distance front (combustible materials) | 300 |
| | Safety distance right side (combustible materials) | 300 |
| | Safety distance right side non-combustible materials | 100 |
| | Safety distance left side (combustible materials) | 300 |
| | Safety distance left side non-combustible materials | 100 |
| | Safety distance behind (non-combustible materials) | 100 |
| | Safety distance behind (combustible materials) | 300 |
| | Safety distance (Ceiling) | 1300 |
| | Room min. height(depends on connections and therefore from output, star/delta) | 2060 |



DATA SHEET

# HARVIA WOOD BURNING HEATERS

# Technical images

### 1.1. Stove Parts
A. Upper connection opening
B. Rear connection opening
C. Soot opening
D. Stove door
E. Ash box

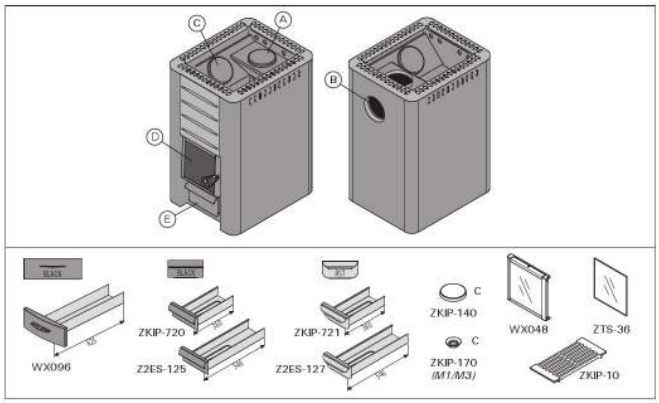


*Stove parts. Note! Only use replacement parts recommended by the manufacturer. Unauthorised modification of the stove is prohibited.*

| | A min. | B min. | C min. | D min. |
|---|---|---|---|---|
| M1, M2, M3/SL, Classic 140 | 1200 | 250 | 300 | 300 |
| 20 Pro, 20 SL/Duo, 20 ES Pro/S20 Boiler, 20 SL Boiler, Premium-VS, Classic 220/Duo, 20 RS/LS Pro | 1300 | 300 | 300 | 300 |
| 28 Pro, Classic 280 | 1280 | 375 | 375 | 375 |
| 36, 36 Duo | 1250 | 500 | 500 | 500 |
| Linear 16, 16 | 1300 | 300 | 350 | 400 |
| Linear 22, 22/S, Linear 22 RS/LS/TS, 22 RS/LS/TS S | 1299 | 400 | 380 | 500 |
| Linear 28 | 1380 | 400 | 400 | 500 |

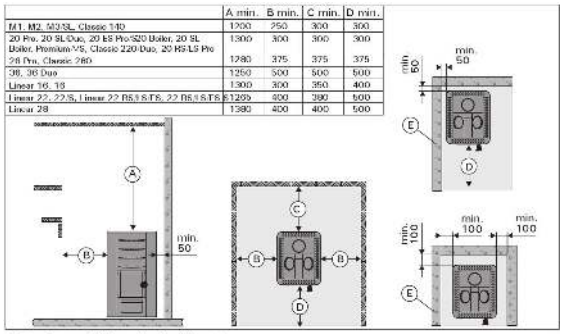


*Safety distances (all dimensions in millimeters)*

| WX017 | B min. |
|---|---|
| M1, M2, M3/SL, 20 Pro, 20 SL/Duo, 20 ES Pro/S, 20 Boiler, 20 SL Boiler, Premium, Classic 140/SL, Classic 220/Duo | 300 |
| 28 Pro, Classic 280 | 375 |
| Linear 16, 16 | 300 |
| Linear 22 28, Linear 22 ES, 22 ES S, 22/S | 400 |

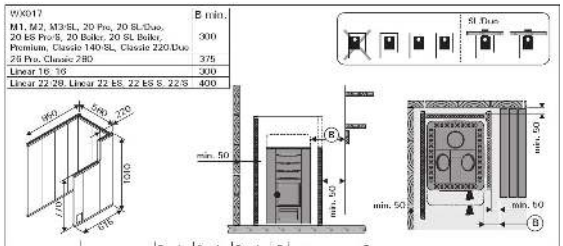


| | | B min. | C min. | D min. | F |
|---|---|---|---|---|---|
| WL400/WL450 | M1, M2, M3/SL | 50 | 50 | 300 | 30 |
| WL500/WL550 | 20 Pro/SL/Duo 20 Boiler, 20 SL Boiler | 62 | 62 | 422 | 30 |
| WL600/WL650 | 20 ES Pro/S | | | | |
| WL700/WL750 | 28 Pro | 73 | 73 | 526 | 30 |
| WL800/WL850 | 36, 36 Duo | 90 | 90 | 700 | 30 |
| WL500/WL580 | 20 RS/LS Pro | 62 | 62 | 422 | 30 |
| WL425/WL475 | Linear 16, 16 | 30 | 30 | 400 | 32 |
| WL525/WL575 | Linear 22, 22 S | 70 | 70 | 500 | 40 |
| WL525/WL585 | Linear 22 RS/LS, 22 RS/LS S | | | | |
| WL530/WL580 | Linear 22 ES, 22 ES S | | | | |
| WL725/WL775 | Linear 28 | | | | |

*Safety distances with protective sheaths (all dimensions in millimeters)*

### 3.4. Accessories
**A. Harvia steel chimney WHP1500.**
**B. Water heater VL22I.** Installed on the top of the upper connection opening. When a protective sheath or other protection is used that is not large enough to protect the inflammable materials around the stove from the heat radiation of the pipe between the water heater and smoke flue, you must install a radiation cover around the pipe.
**C. Radiation cover WZ020130.** Installed around the smoke pipe.
**D. Harvia protective sheath WX017.**
**E. Harvia protective sheath WL400–WL775.**

**F. Harvia protective bedding WX018, WL100.** (not for models 20 RS/LS Pro, 36, 36 Duo, Premium VS, Linear 22 RS/LS, 22 RS/LS S).
**G. Harvia protective bedding WL110** (not for models 20 ES Pro/S, Linear 22 ES, 22 ES S).
**H. Angle smoke pipe.** Different models.
**I. Lead-through flange for smoke pipe WZ020115.** Covers the edges of the flue opening and the sealing in the wall. Made of stainless steel. Consists of two parts to make it useable with differently inclined smoke pipes.
**J. Masonry connector WZ011115.** Connected to the flue opening, does not require other seals. The inner side already has a seal.

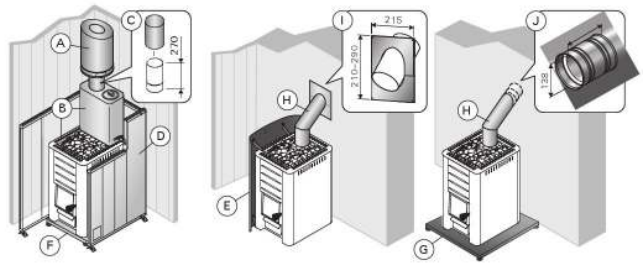


*Accessories (all dimensions in millimeters)*