HAKA **110/51Th**

A+

Technical data
Version **01/2018**

OPERATION WHEN DIRECTLY CONNECTED TO CHIMNEY	
Tested according to	EN 13229
Nominal heat power	14 kW
Efficiency	> 80 %
Consumption of wood	4,1 kg/h
Mass flow of flue gas	11 g/s
Average flue gas temperature on the output	263 °C
Heat distribution	
fireplace insert door glass (single / double)	51–59 % 49 / 41 %
Required chimney pressure	12 Pa
Required amount of combustion air	40 m^3/h
Minimum supply air grating cross-section	1 200 cm^2
Minimum outgoing air grating cross-section	1 400 cm^2

GENERAL TECHNICAL INFORMATION	
Combustion air connection	∅ 150 mm
Total weight / lining weight	ca. 420 / 100 kg
Use in non-ventilated accumulation builds according to craft rules	suitable
Meets values	BImSchV (Stufe2), 15a BVG

Hoxter gmbh I Hersbrucker Straße 23 I 912 44 Reichenschwand I Germany I info@hoxter.de I +49 (0)9151 8659 163
Hoxter a.s. I Jinacovice 509 I 664 34 Jinacovice I Czech Republic I info@hoxter.eu I +420 518 777 701

HAKA **110/51Th**

Technical data
Version **01/2018**

M 1 : 10

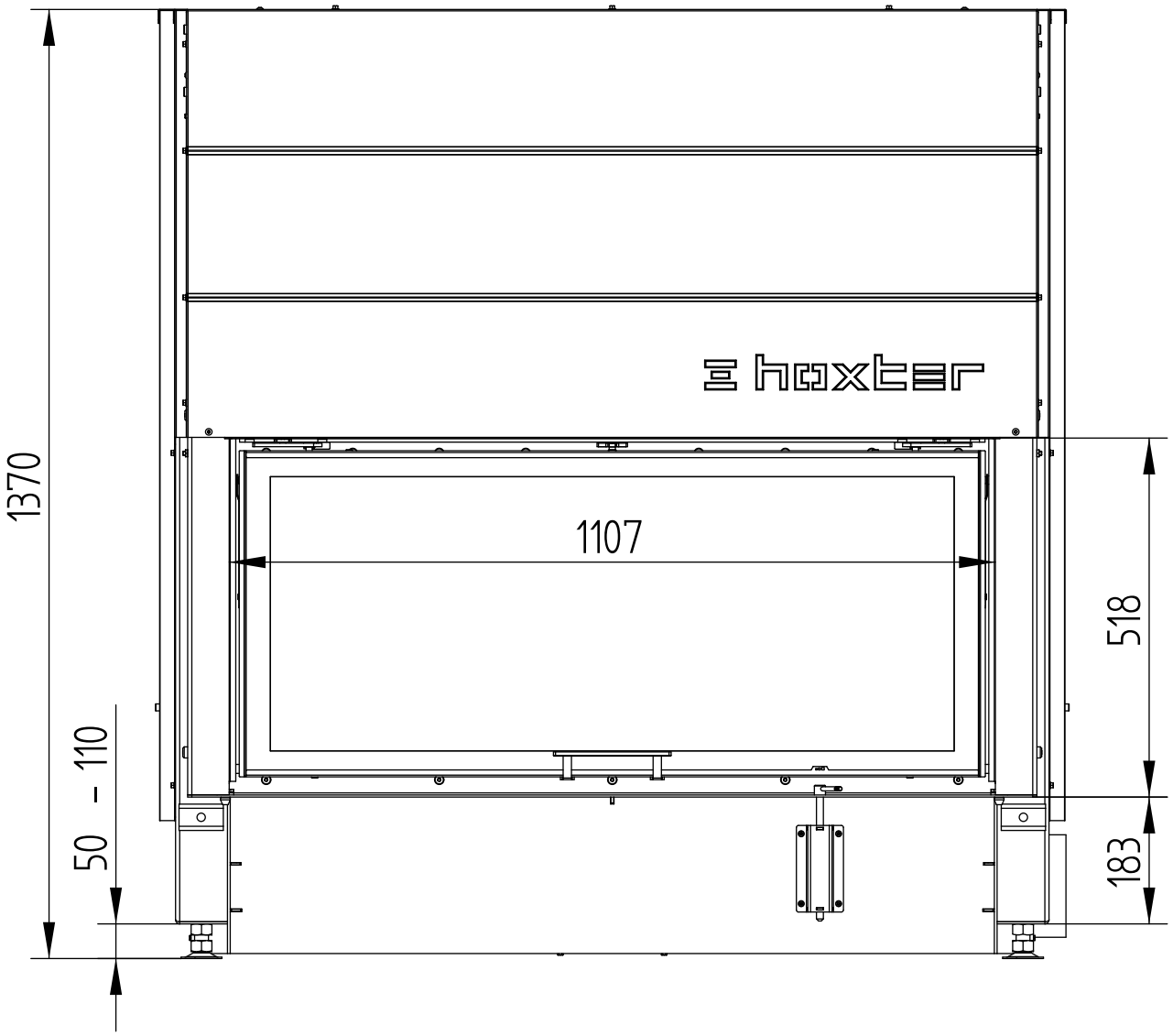

HAKA **110/51Th**

Technical data
Version **01/2018**

M 1 : 10

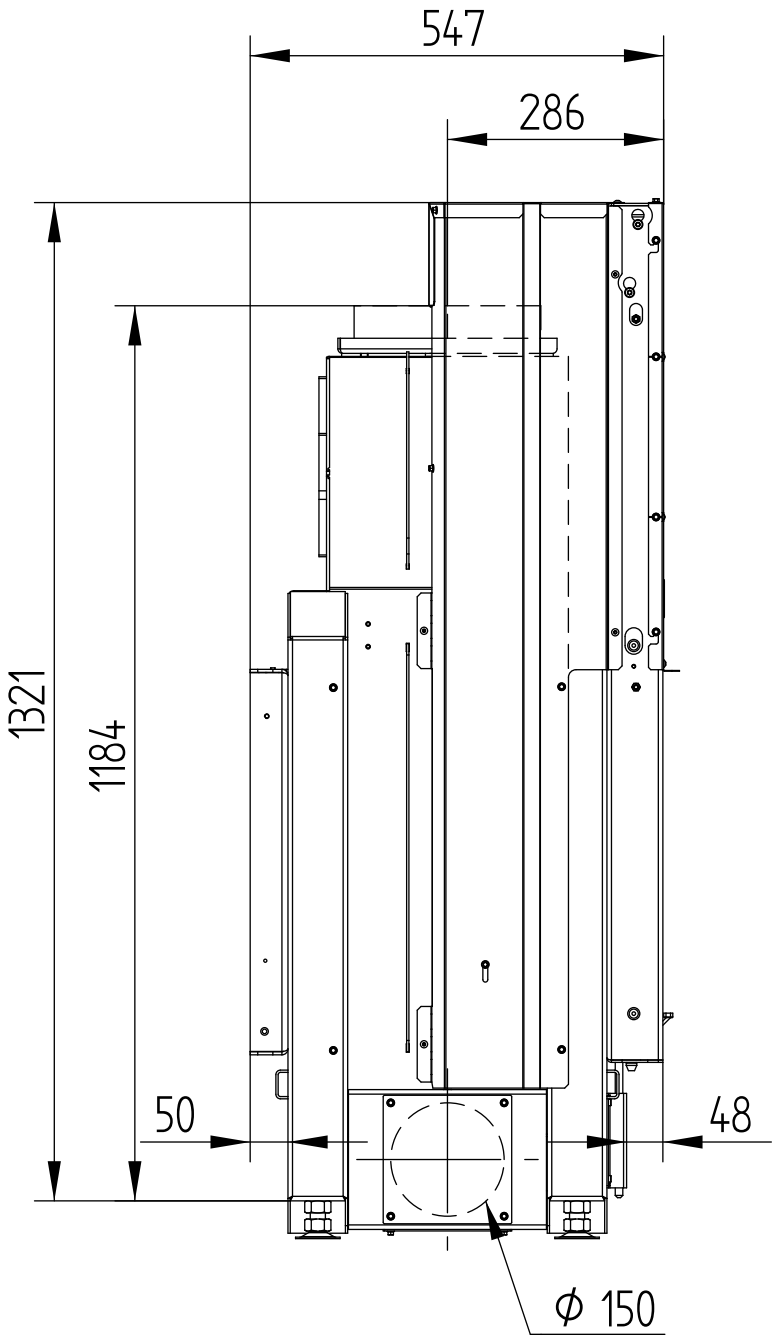

Hoxter gmbh I Hersbrucker Straße 23 I 912 44 Reichenschwand I Germany I info@hoxter.de I +49 (0)9151 8659 163
Hoxter a.s. I Jinacovice 509 I 664 34 Jinacovice I Czech Republic I info@hoxter.eu I +420 518 777 701

HAKA **110/51Th**

Technical data
Version **01/2018**

M 1 : 10

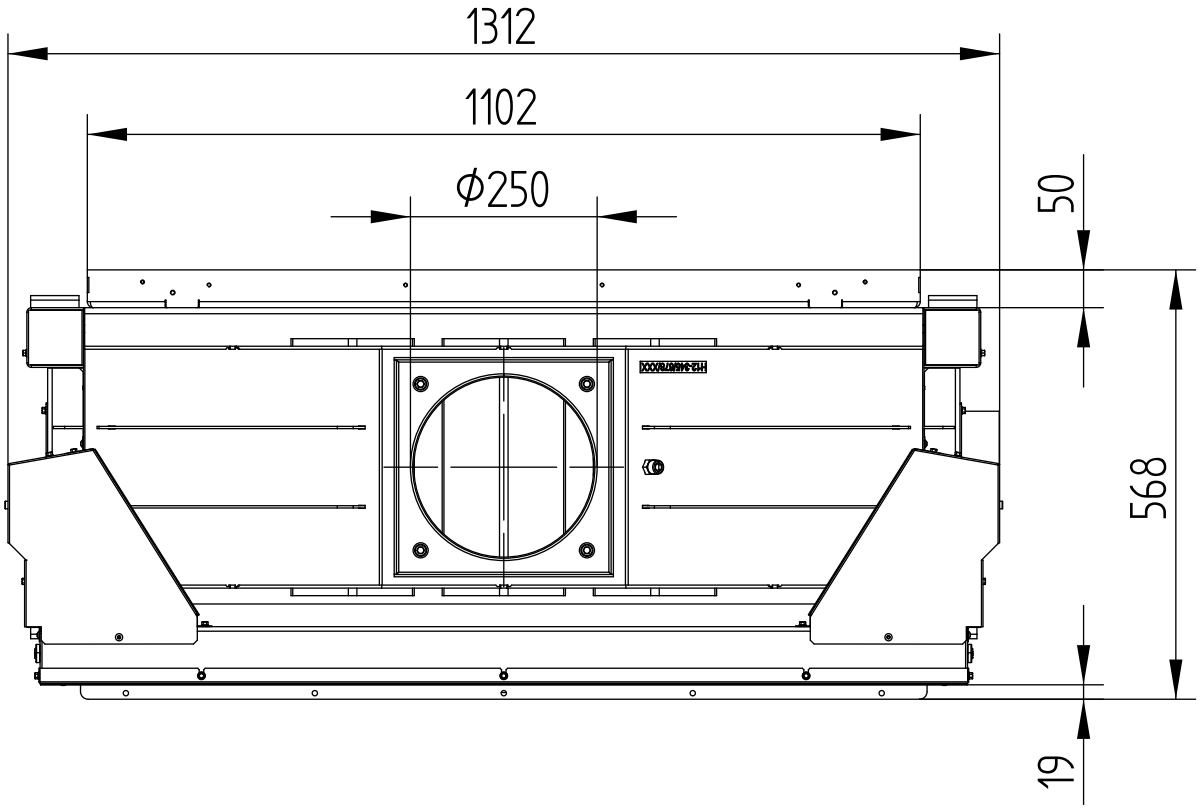

HAKA **110/51Th**

Technical data
Version **01/2018**

COVER FRAME 4-SIDED 1 x 90°, 50 mm

M 1 : 10

Slide-up door

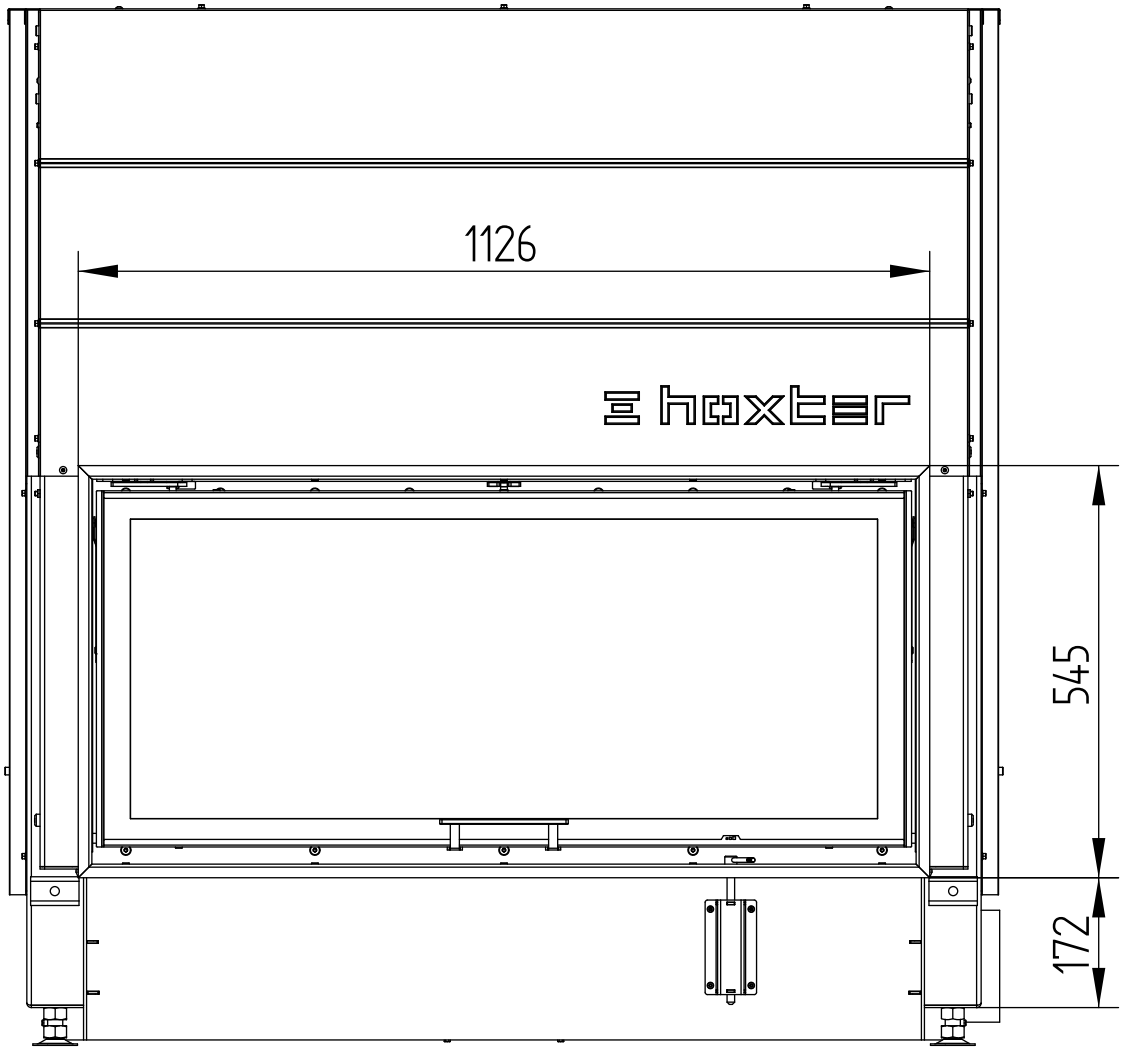

Hoxter gmbh I Hersbrucker Straße 23 I 912 44 Reichenschwand I Germany I info@hoxter.de I +49 (0)9151 8659 163
Hoxter a.s. I Jinacovice 509 I 664 34 Jinacovice I Czech Republic I info@hoxter.eu I +420 518 777 701

HAKA **110/51Th**

Technical data
Version **01/2018**

COVER FRAME 4-SIDED 1 x 90°, 50 mm

M 1 : 10

Tilt door

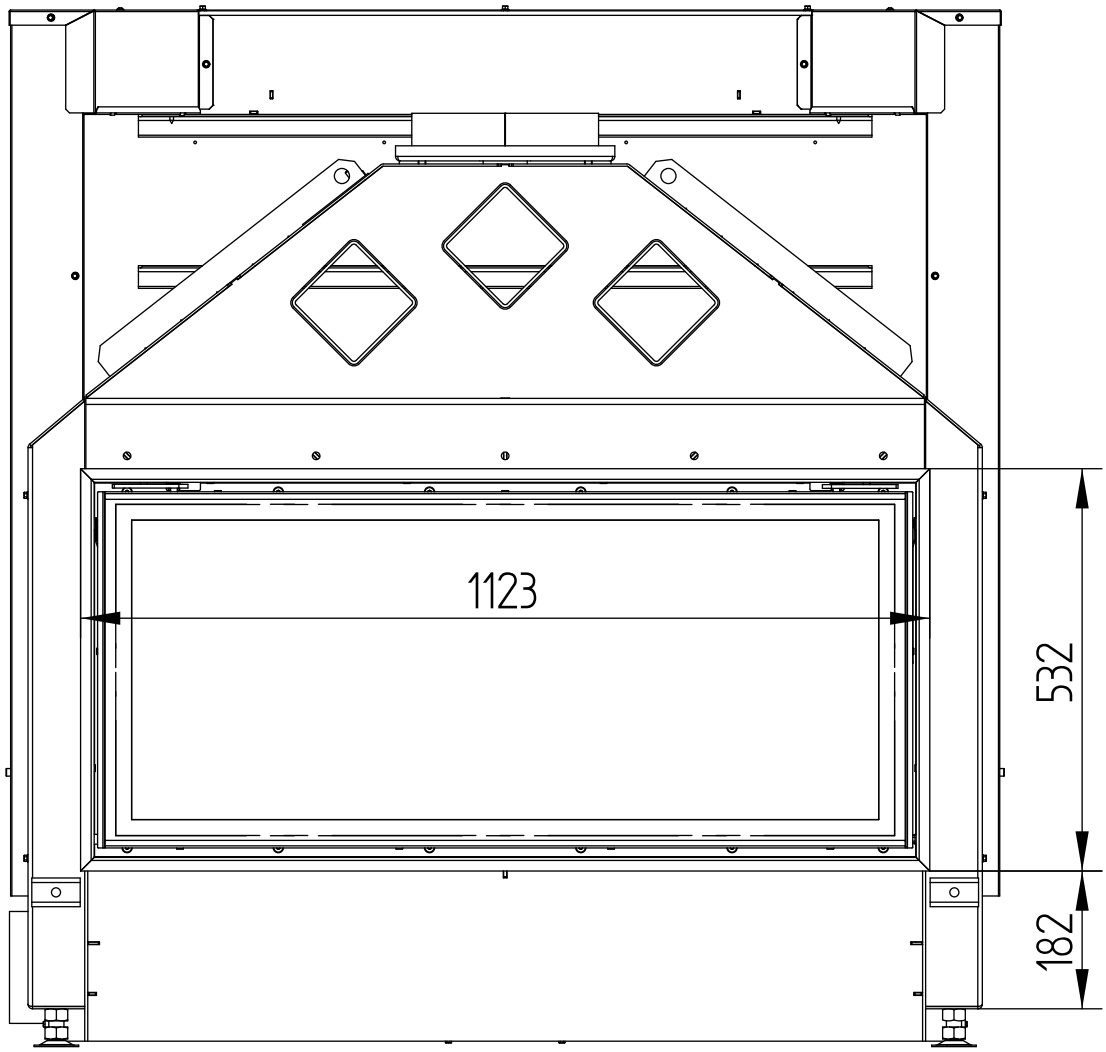

Hoxter gmbh I Hersbrucker Straße 23 I 912 44 Reichenschwand I Germany I info@hoxter.de I +49 (0)9151 8659 163
Hoxter a.s. I Jinacovice 509 I 664 34 Jinacovice I Czech Republic I info@hoxter.eu I +420 518 777 701

HAKA **110/51Th**

Technical data
Version **01/2018**

COVER FRAME 4-SIDED 1 x 90°, 50 mm

M 1 : 10

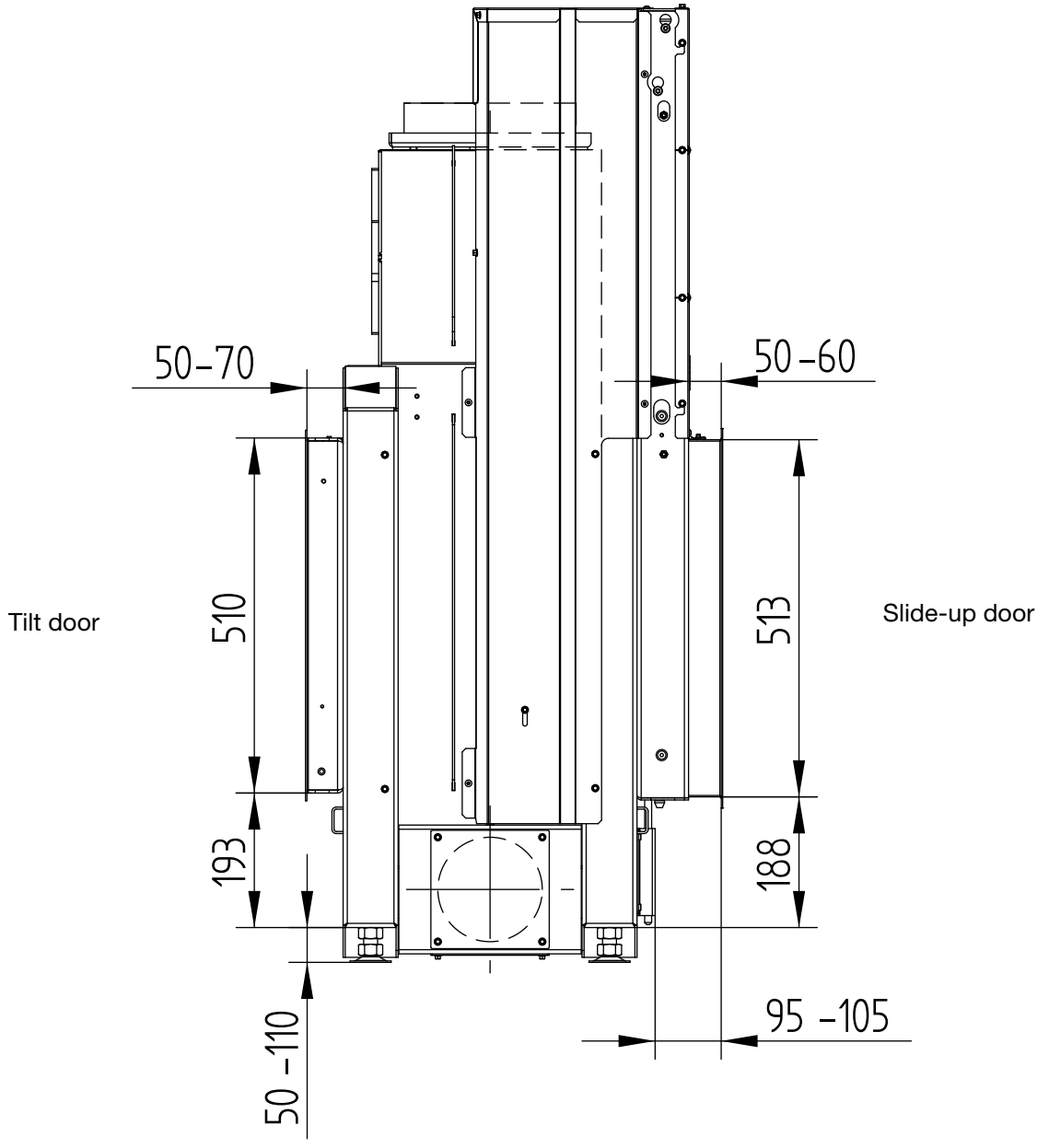

HAKA **110/51Th**

Technical data
Version **01/2018**

COVER FRAME 4-SIDED 1 x 90°, 50 mm

M 1 : 10

Tilt door

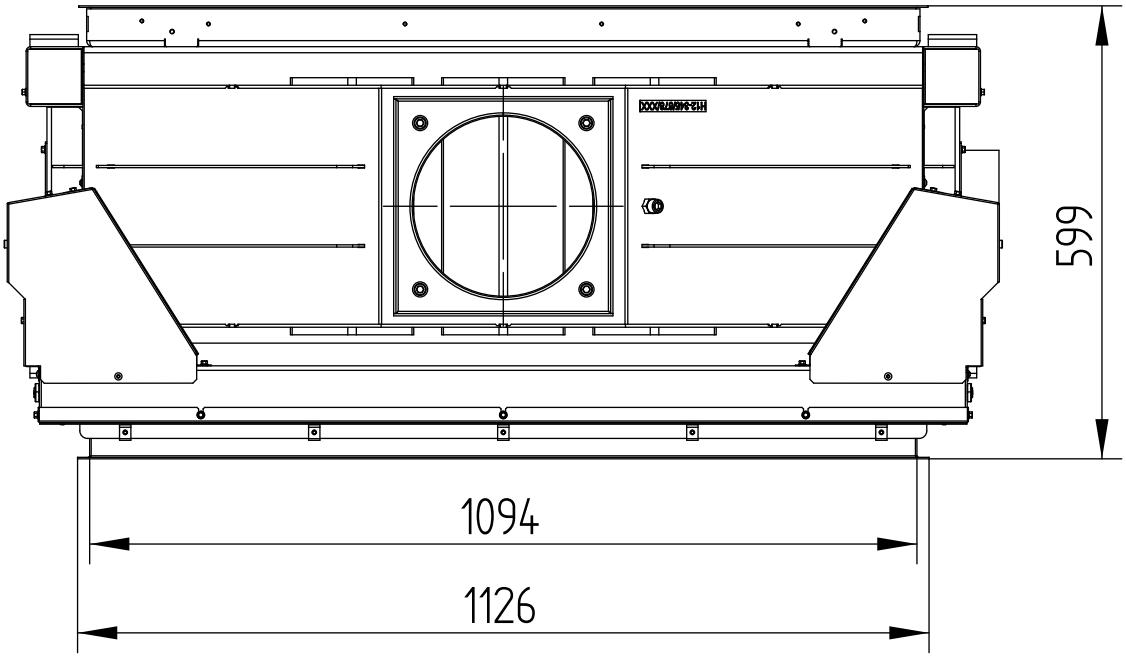

Slide-up door

HAKA **110/51Th**

Technical data
Version **01/2018**

COVER FRAME 4-SIDED 1 x 90°, 80 mm

M 1 : 10

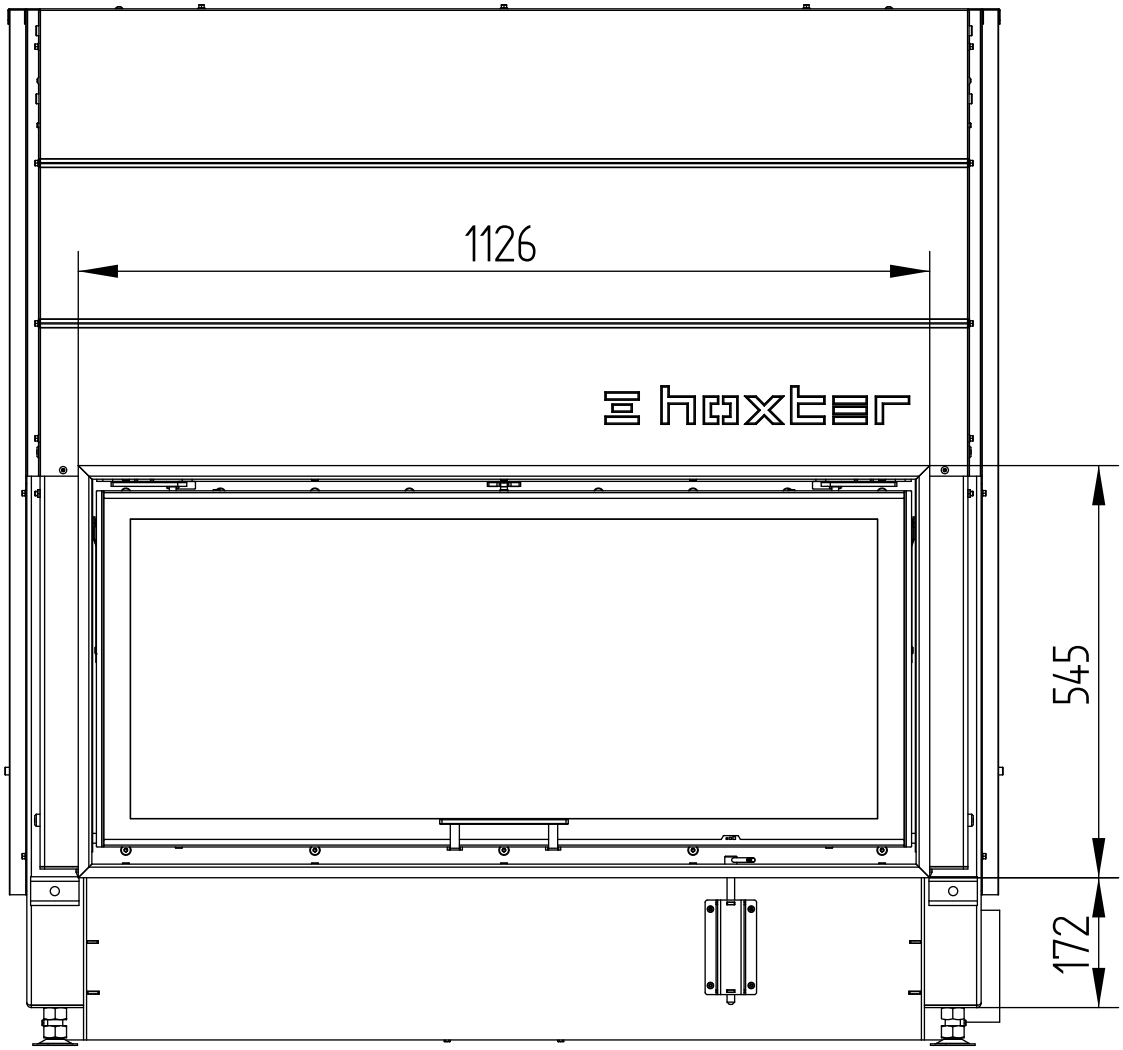

HAKA **110/51Th**

Technical data
Version **01/2018**

COVER FRAME 4-SIDED 1 x 90°, 80 mm

M 1 : 10

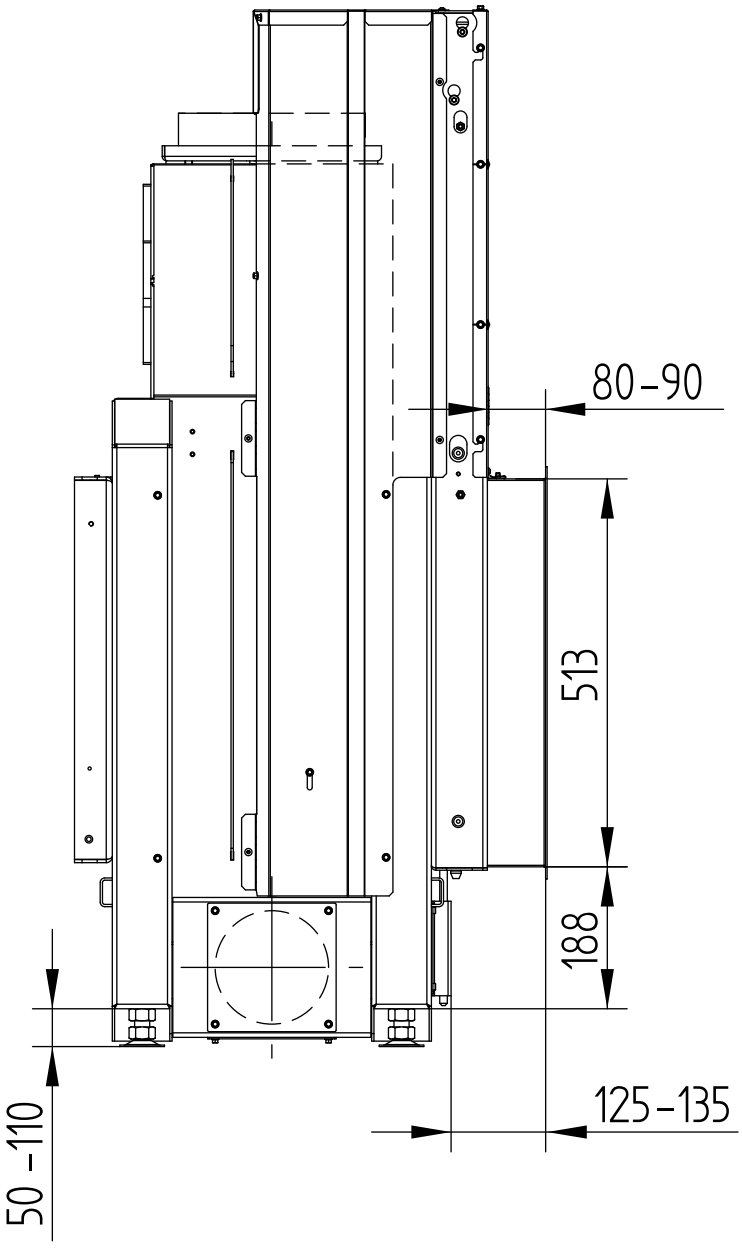

HAKA **110/51Th**

Technical data
Version **01/2018**

COVER FRAME 4-SIDED 1 x 90°, 80 mm

M 1 : 10

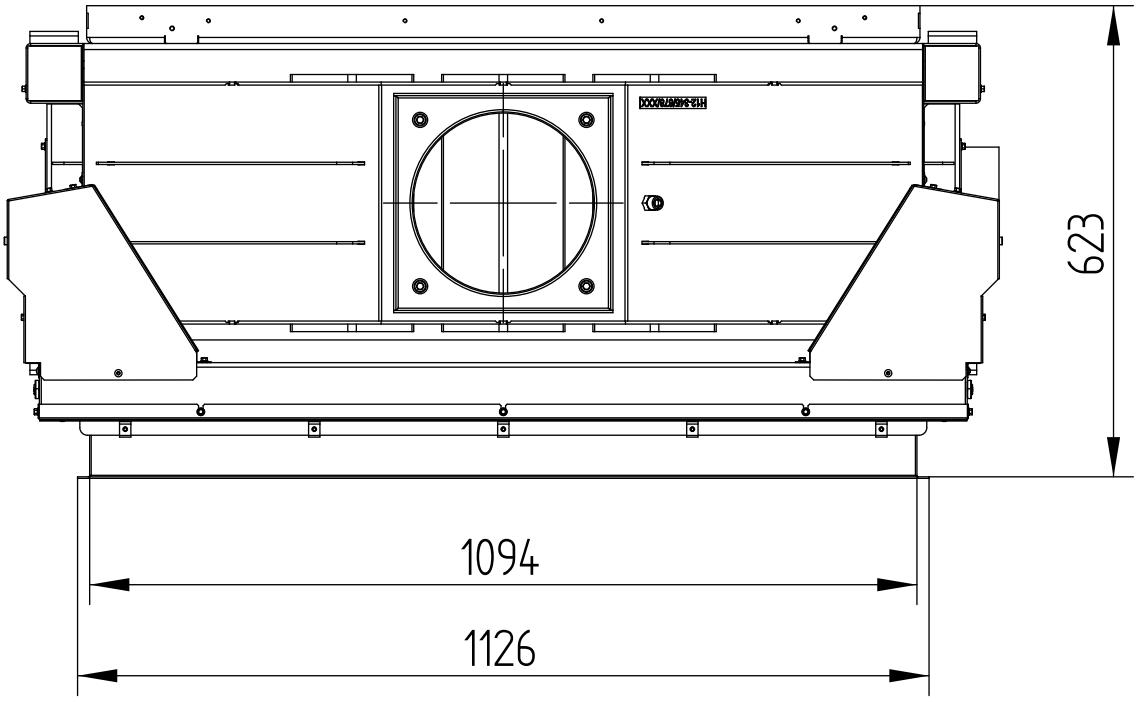

HAKA **110/51Th**

Technical data
Version **01/2018**

BUILD-ON FRAME 4-SIDED, 50 mm

M 1 : 10

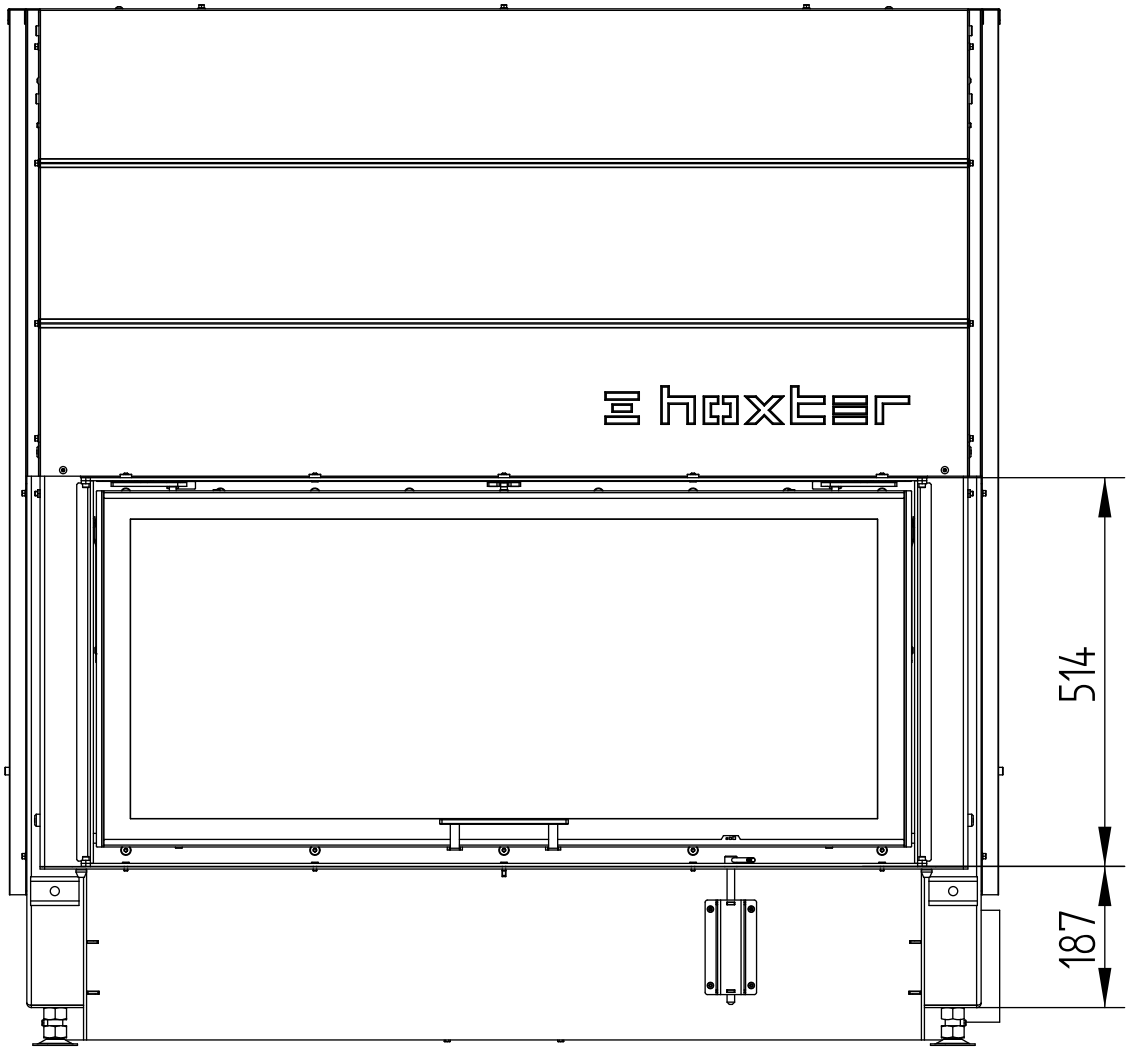

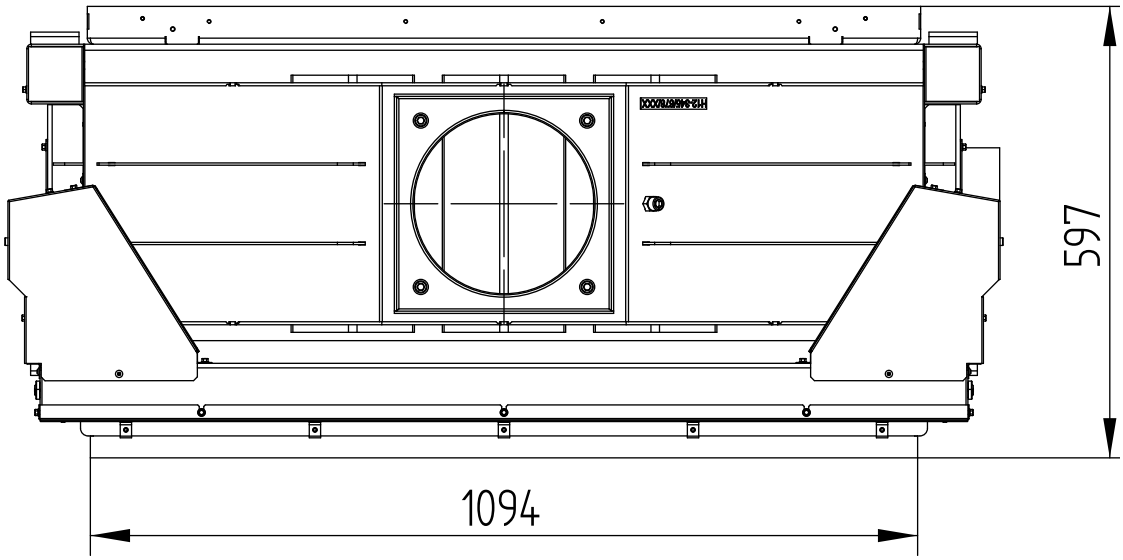

Hoxter gmbh I Hersbrucker Straße 23 I 912 44 Reichenschwand I Germany I info@hoxter.de I +49 (0)9151 8659 163
Hoxter a.s. I Jinacovice 509 I 664 34 Jinacovice I Czech Republic I info@hoxter.eu I +420 518 777 701

HAKA **110/51Th**

Technical data
Version **01/2018**

BUILD-ON FRAME 4-SIDED, 50 mm

M 1 : 10

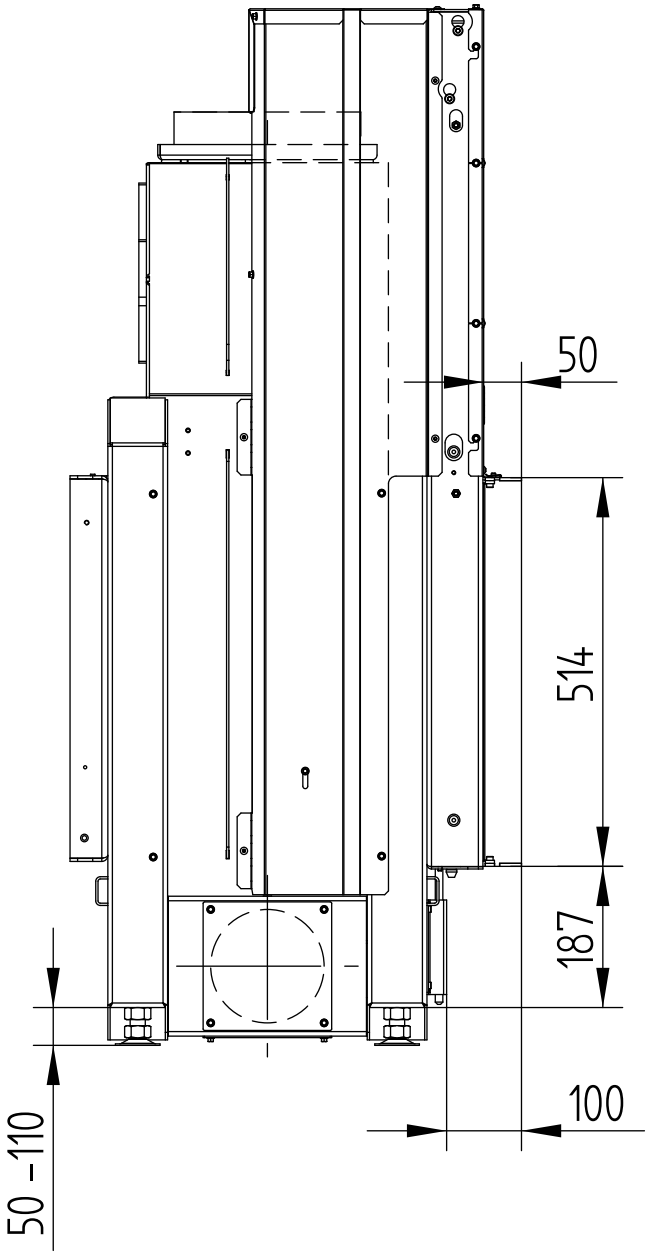

Hoxter gmbh I Hersbrucker Straße 23 I 912 44 Reichenschwand I Germany I info@hoxter.de I +49 (0)9151 8659 163
Hoxter a.s. I Jinacovice 509 I 664 34 Jinacovice I Czech Republic I info@hoxter.eu I +420 518 777 701

HAKA **110/51Th**

Technical data
Version **01/2018**

BUILD-ON FRAME 4-SIDED, 80 mm

M 1 : 10

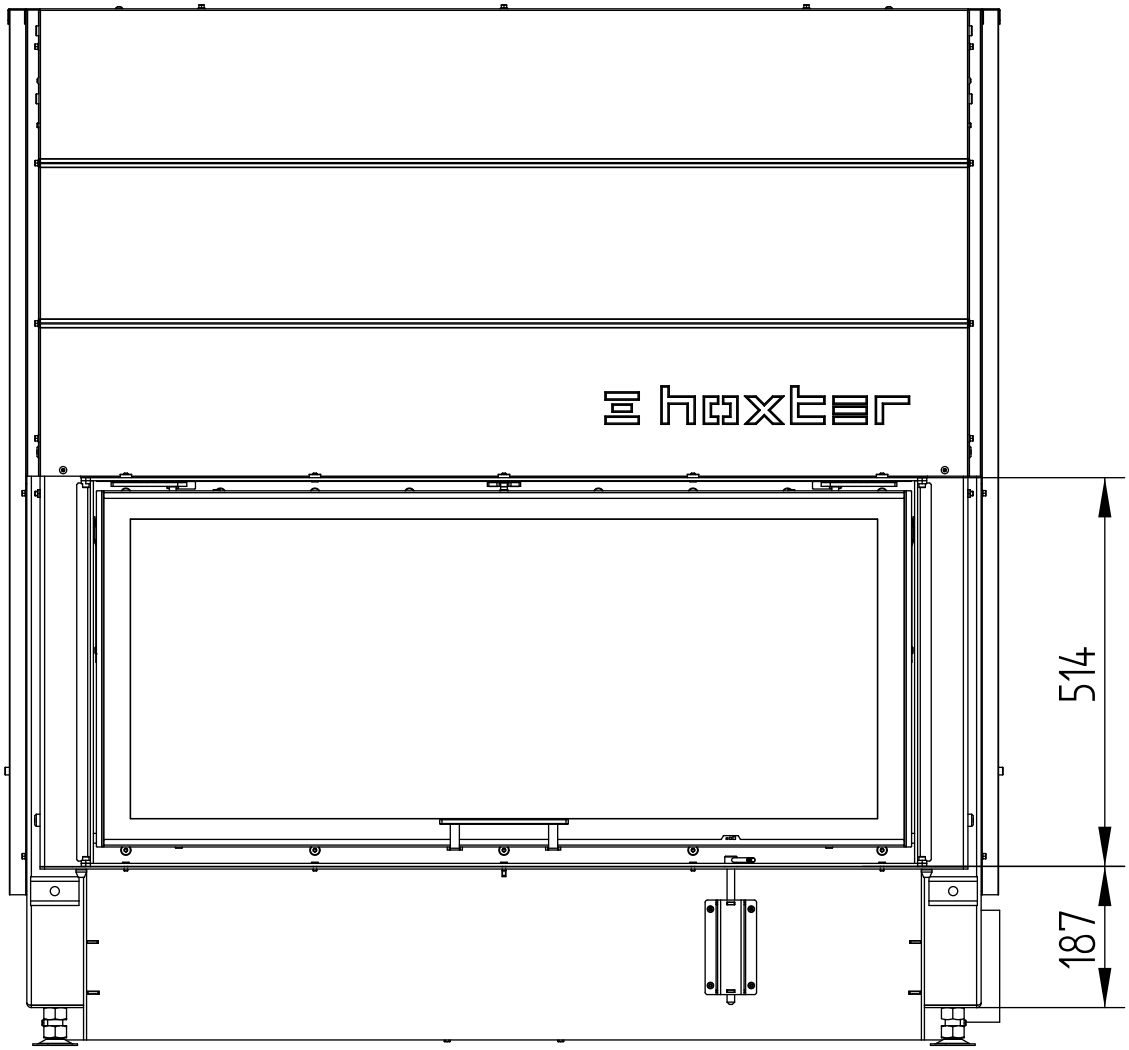

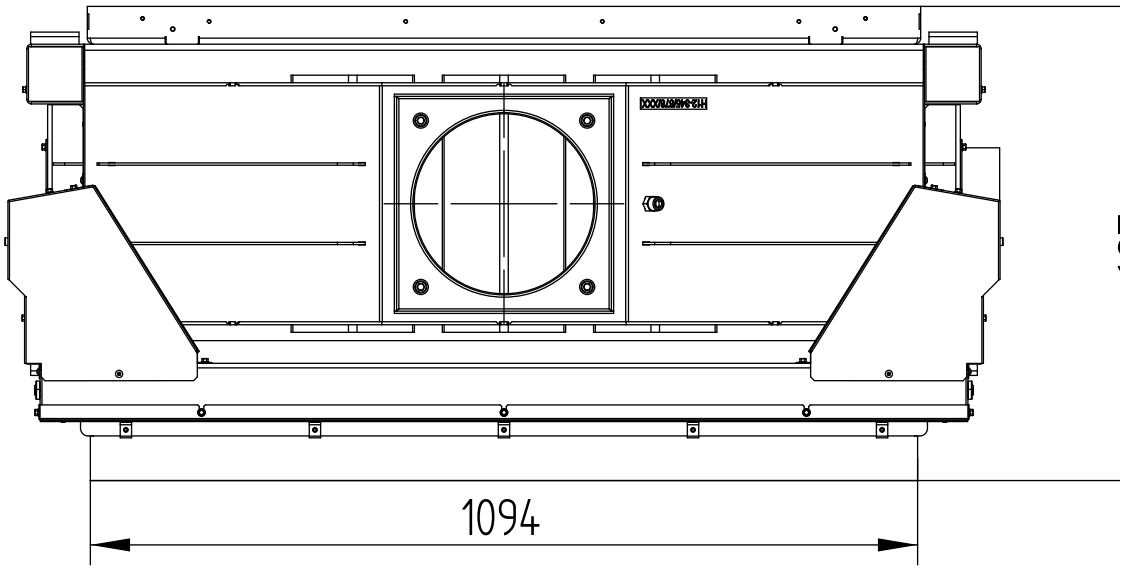

Hoxter gmbh I Hersbrucker Straße 23 I 912 44 Reichenschwand I Germany I info@hoxter.de I +49 (0)9151 8659 163
Hoxter a.s. I Jinacovice 509 I 664 34 Jinacovice I Czech Republic I info@hoxter.eu I +420 518 777 701

HAKA **110/51Th**

Technical data
Version **01/2018**

BUILD-ON FRAME 4-SIDED, 80 mm

M 1 : 10

