BRUNNER FIREPLACES





Architektur 38/86

State: 2018-01-23



BRUNNER®
made in germany.

Dimension sheets - Architektur 38/86

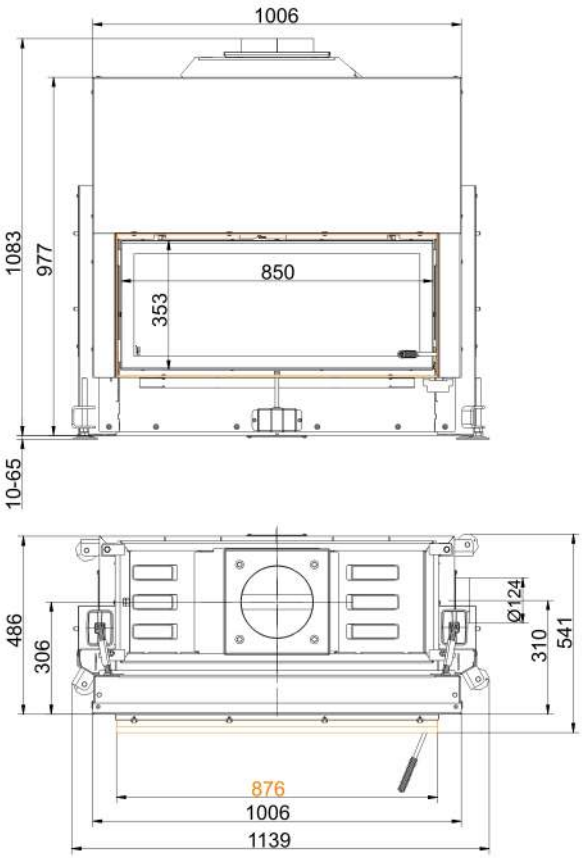

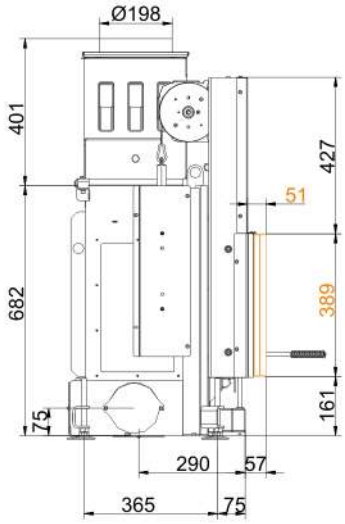

… with mounting frame 50 mm

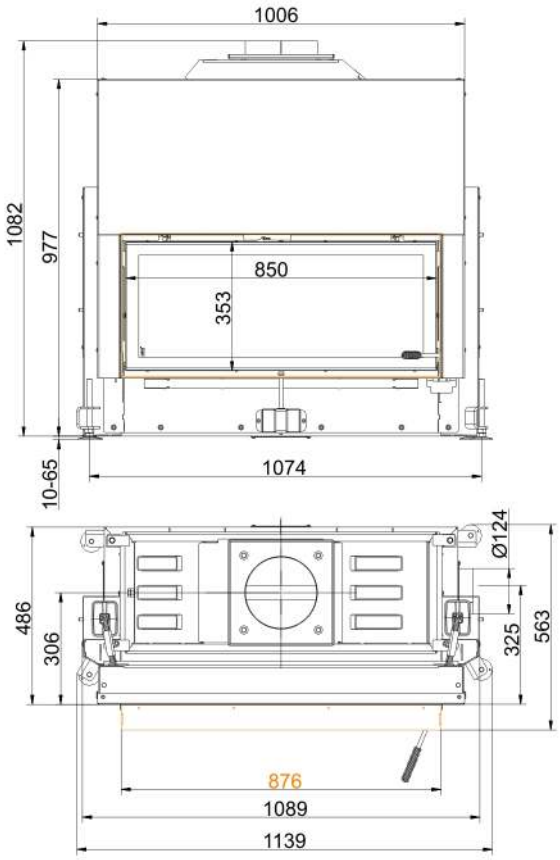

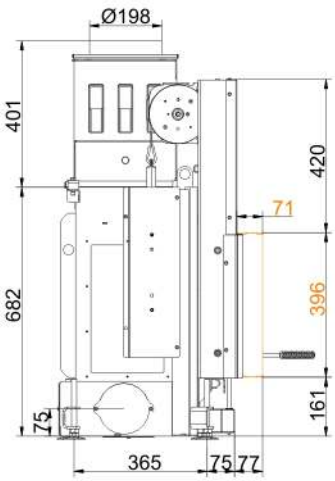

… with mounting frame 70 mm

State: 2018-01-23

Dimension sheets - Architektur 38/86

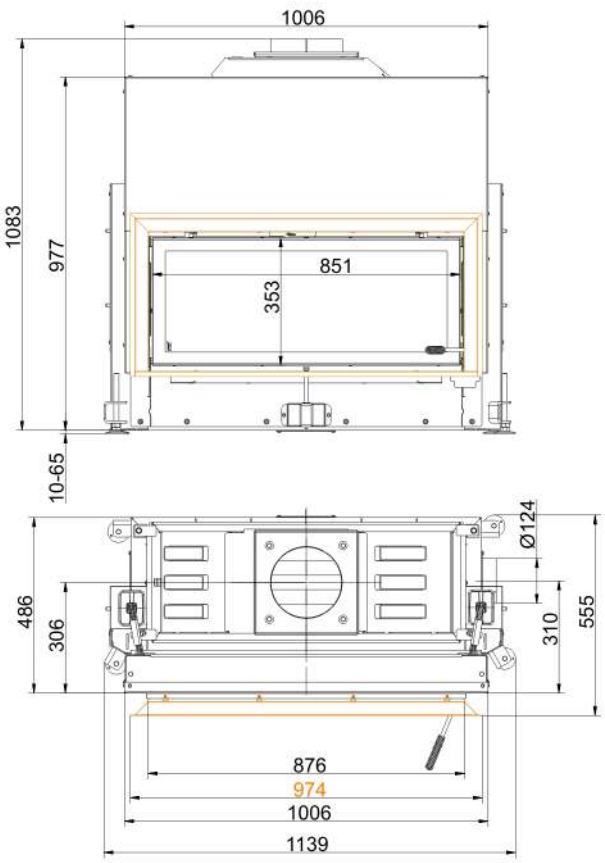

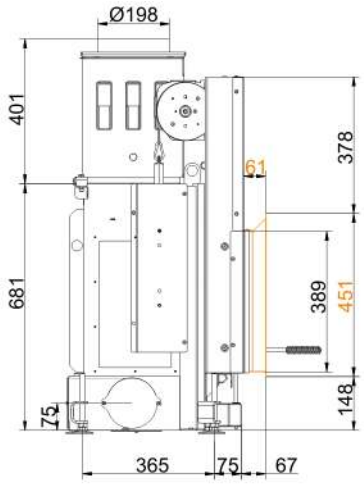

… with door frame

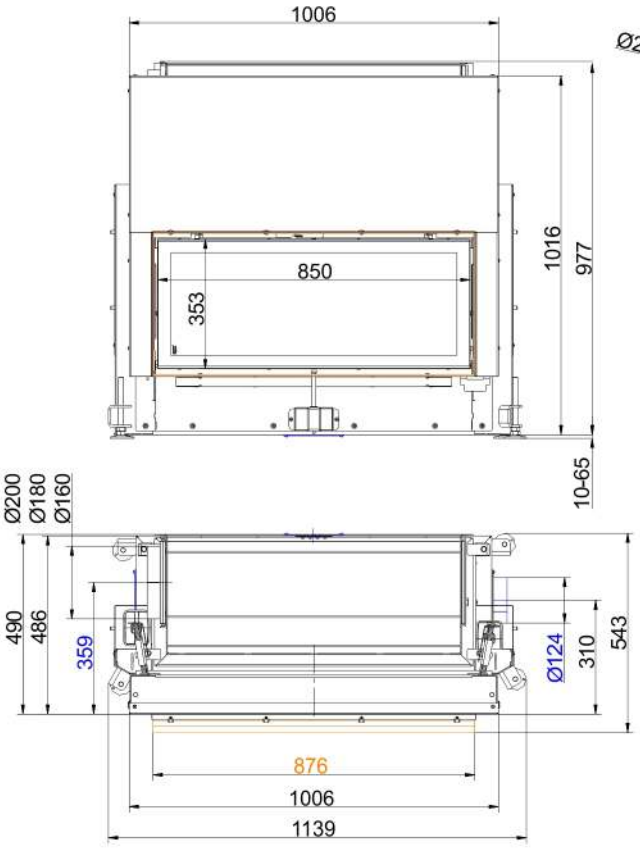

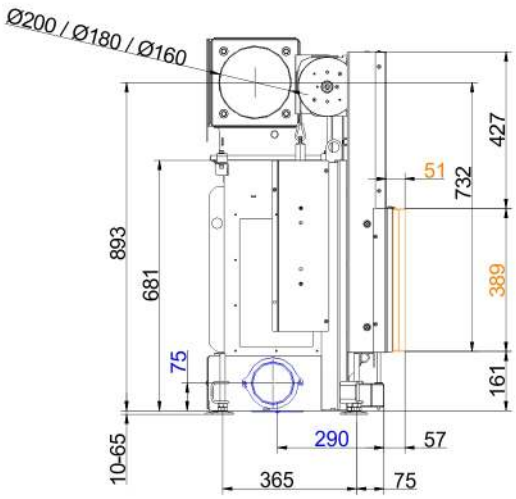

… with mounting frame 50 mm

State: 2018-01-23

Dimension sheets - Architektur 38/86

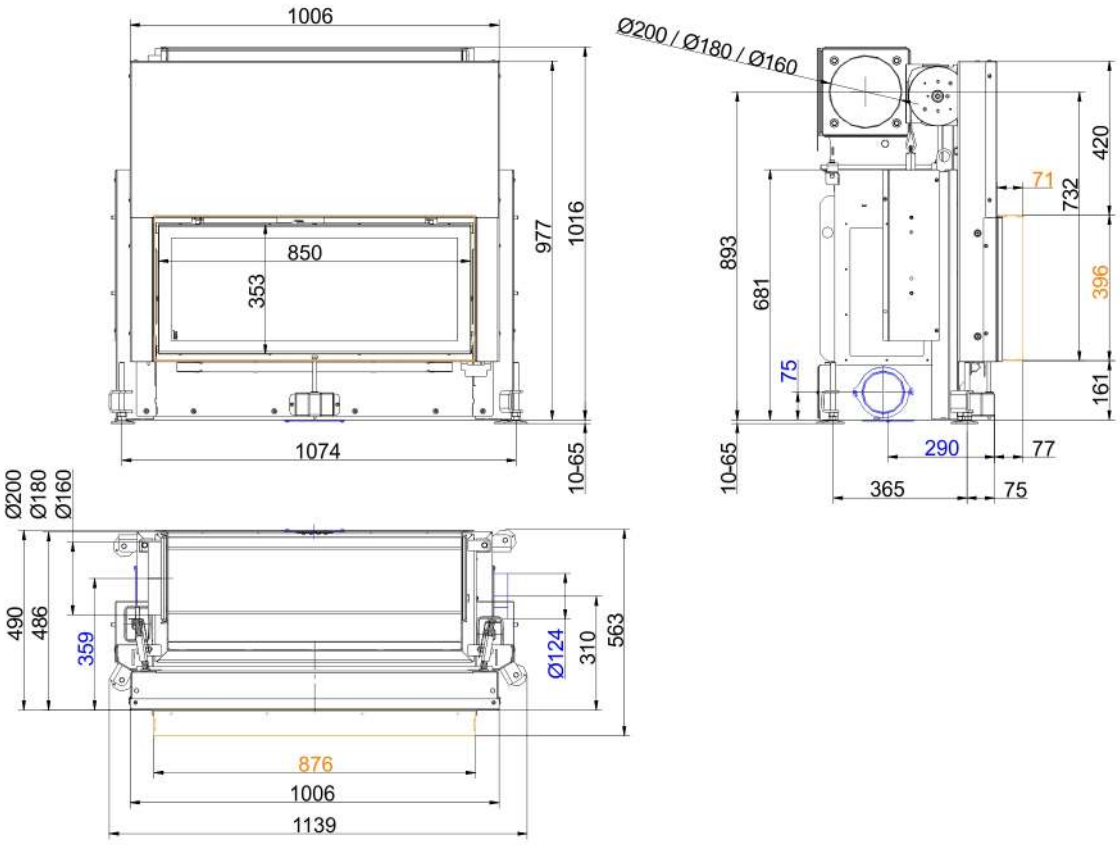

… with mounting frame 70 mm

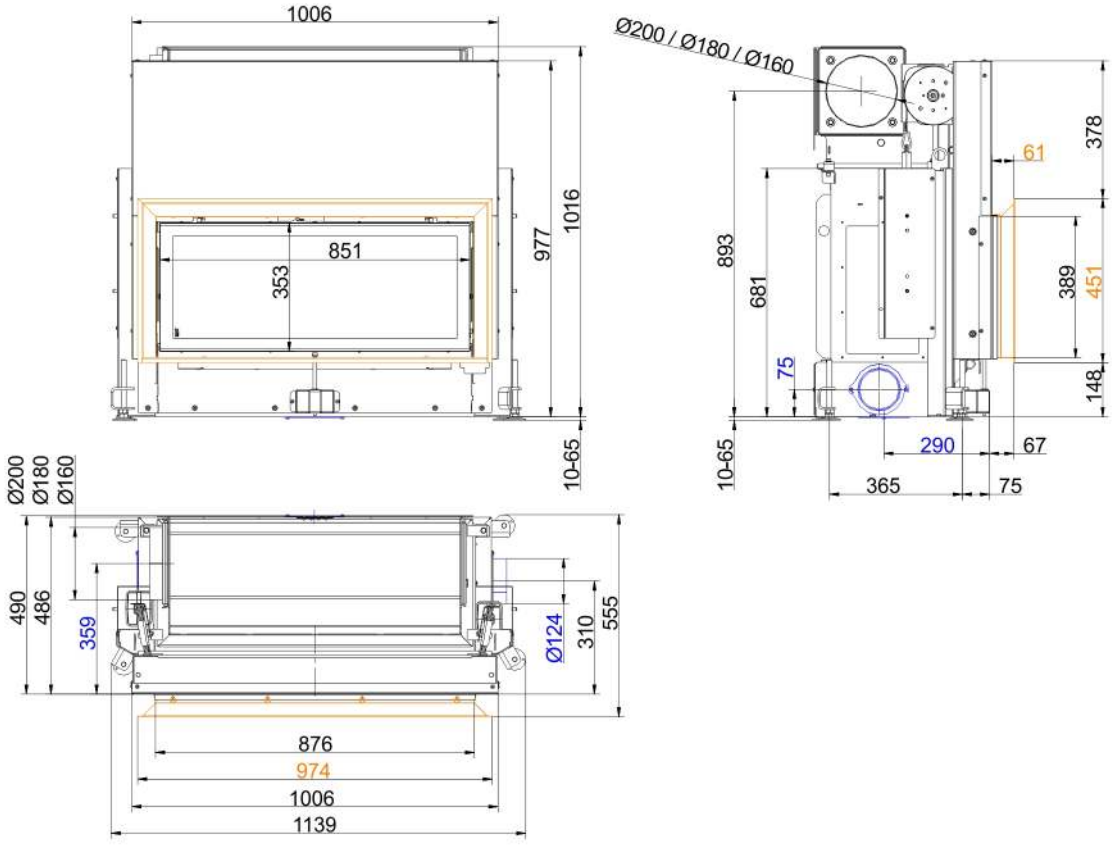

… with door frame

Dimension sheets - Architektur 38/86

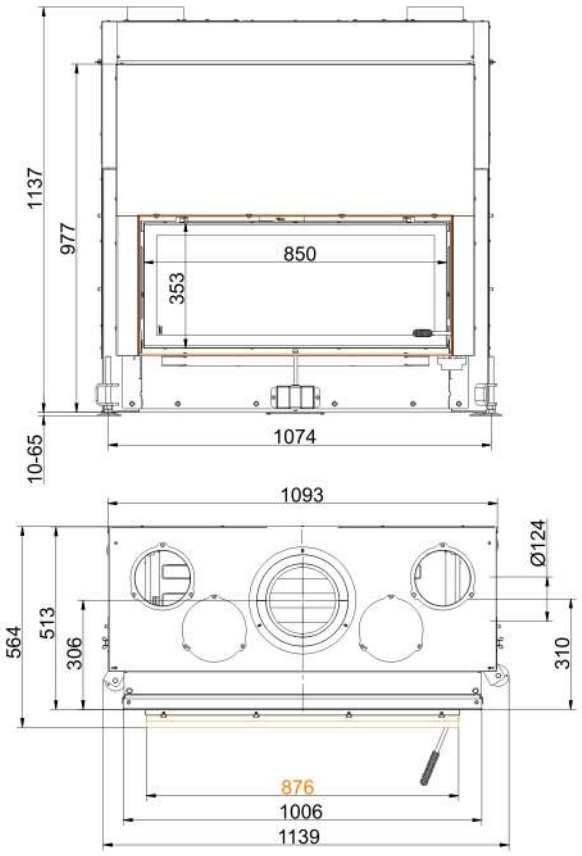

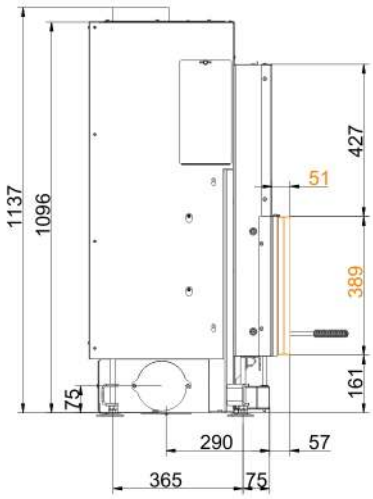

… with moutiting frame 50 mm and convection cladding

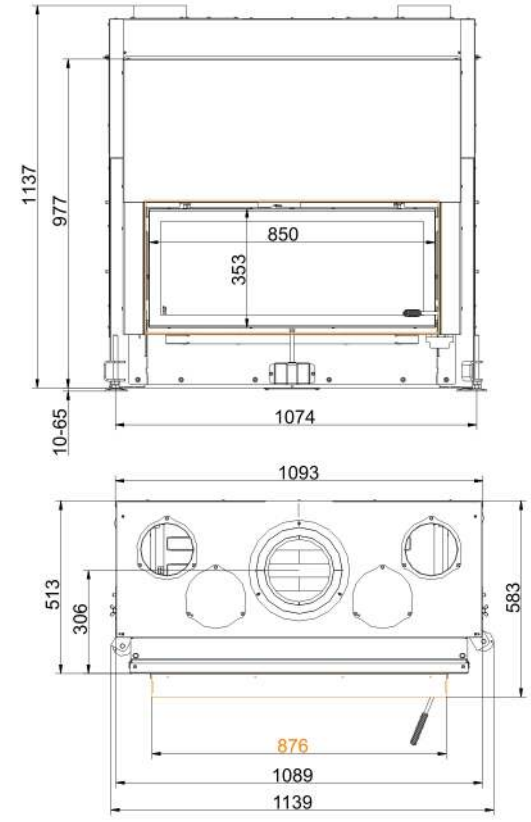

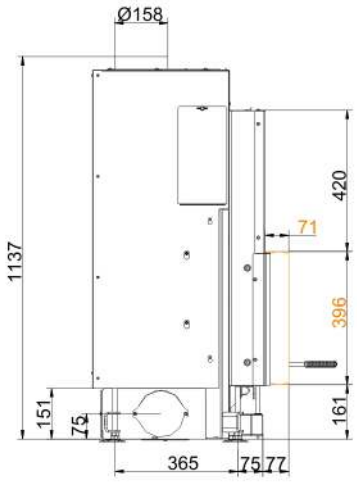

… with moutiting frame70 mm and convection cladding

State: 2018-01-23

Dimension sheets - Architektur 38/86

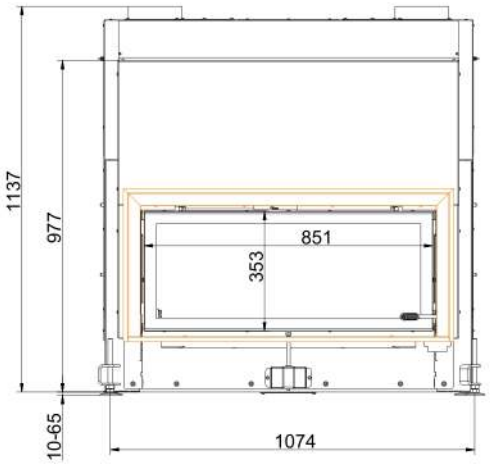

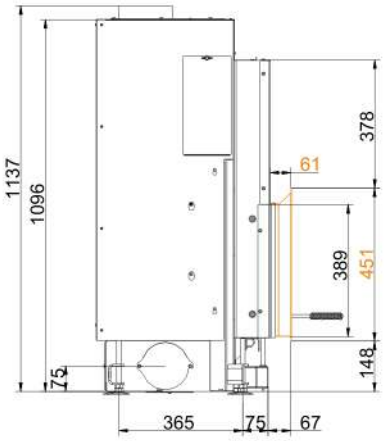

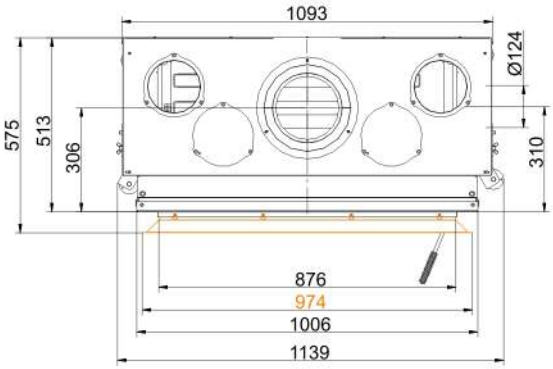

… with frame and convection cladding

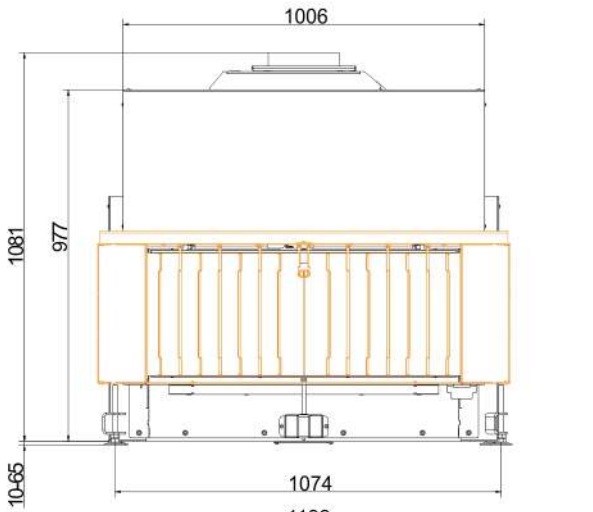

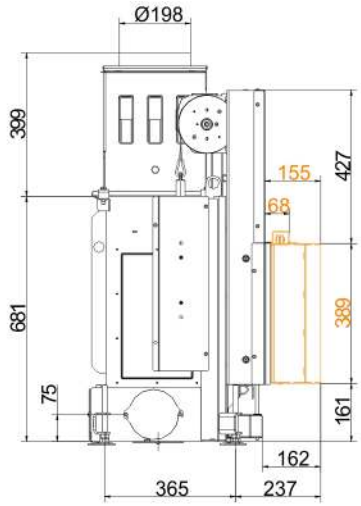

… with heatSTOP®

We suggest for CAD planing Palette CAD. Permanent updated drawings: www.brunner.de
Frames / front versions are marked colored.

State: 2018-01-23

Planning and installation - Architektur 38/86

Tested according to		EN 13229 W	EN 13229 WA	EN 13229 W
Values measured at		Rated capacity	Accumulation	Open
Suitable for all construction types according to rules		OK	OK	-
EEI		105.7	105.7	105.7
Data for functional demonstration				
Rated heat power	kW	10	-	-
Fire wood volume	kg/h	3.1	5.3	3.1
Combustion performance	kW	13.5	22	13.5
Flue gas mass flow	g/s	11	20	75
Outlet temperature (before heating surface)	°C	-	375	-
Flue gas temperature after:				
attached steel smoke hood	°C	240	-	135
1 x adjoining cast iron radiator (GNF 8/10)	°C	-	180	-
2 m ceramic accumulator [1)]	°C	-	180	-
1,4 m accumulation stones (MSS) [1)]	°C	-	180	-
Necessary supply pressure	Pa	12	15	6
Combustion air consumption	m^3/h	30	45	200
Combustion air connection Ø	mm	125	125	-
Heat distribution				
Insert / heat accumulator	%	30 / 30	30 / 30	-
Glass pane (single / double)	%	40 / -	40 / -	-
Cross-section of gratings [2)]				
Supply air	cm^2	700 / 100 / 500	700 / 100 / 500	-
Warm air	cm^2	700 / 100 / 500	700 / 100 / 500	-
Minimal oven surface for closed construction type				
Heat dissipating surface	m^2	5	5	-
Min. distances of fireplace without / with convection casing				
to insulation layer	cm	8 / 3	8 / 3	8 / 3
to mounting floor	cm	2 / 2	2 / 2	2 / 2
Thermal insulation without / with air gratings [3)]				
Mounting wall	cm	18 / 14	18 / 14	18 / 14
Floor	cm	2	2	2
Ceiling	cm	28 / 20	28 / 20	28 / 20
Brick lining for combustible wall	cm	10	10	10
Weight				
Fireplace / combustion chamber	kg		160 / 64 / -	
Meets requirement/limit values for:				
Germany/ Austria / Suisse / Norway		1.BImSchV (Stufe 2) / 15a BVG (2015) / LRV / NS 3059		- / - / - / NS 3059

1) Approximate value. Proof of function provided by calculation required
2) for fireplace inserts / flue gas pipe / metallic reheating surface
3) Values determined with upper air sections; stove cladding is heat emitting.

Ulrich Brunner GmbH
Zellhuber Ring 17 - 18
D-84307 Eggenfeldern
Telefonat: +49 / (0)87 21 / 7 71-0
Telefax: +49 / (0)87 21 / 7 71-100
info@brunner.de | www.brunner.de

BRUNNER®
made in germany.