TILE STOVE INSERTS FROM BRUNNER



HKD 9 Tunnel

State: 2018-01-31



BRUNNER®
made in germany.

Dimension sheets - HKD 9 Tunnel

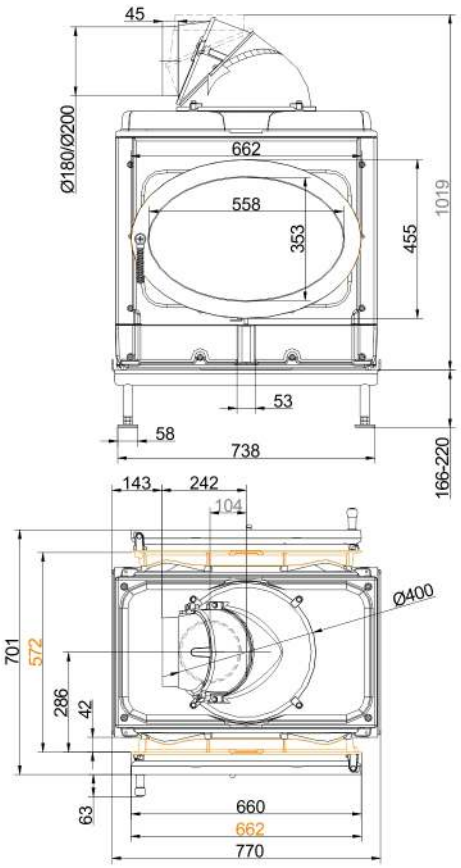

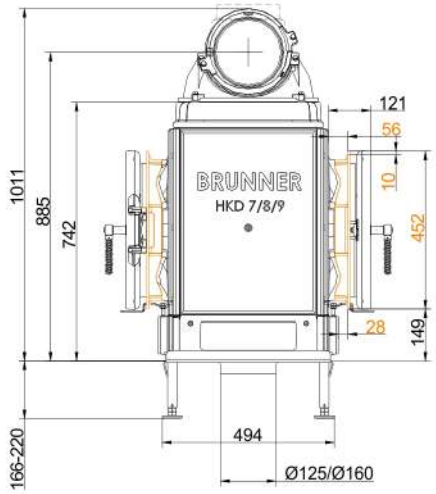

… mounting frame with cast iron dome

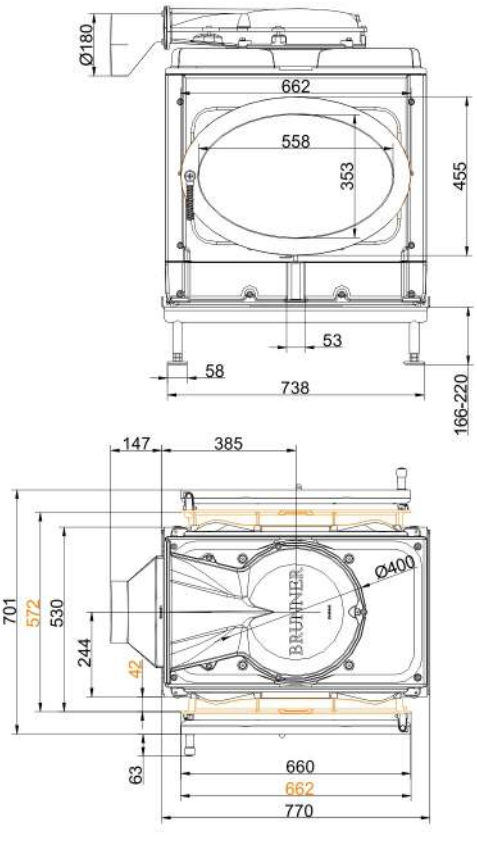

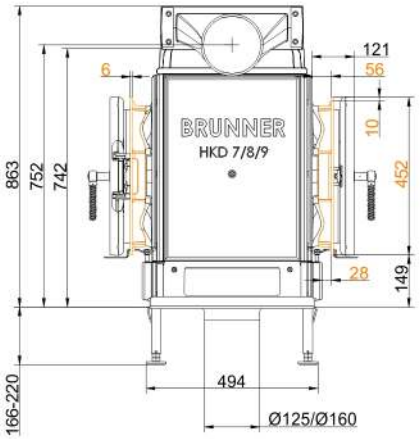

… mounting frame with cast iron dome low

State: 2018-01-31

Dimension sheets - HKD 9 Tunnel

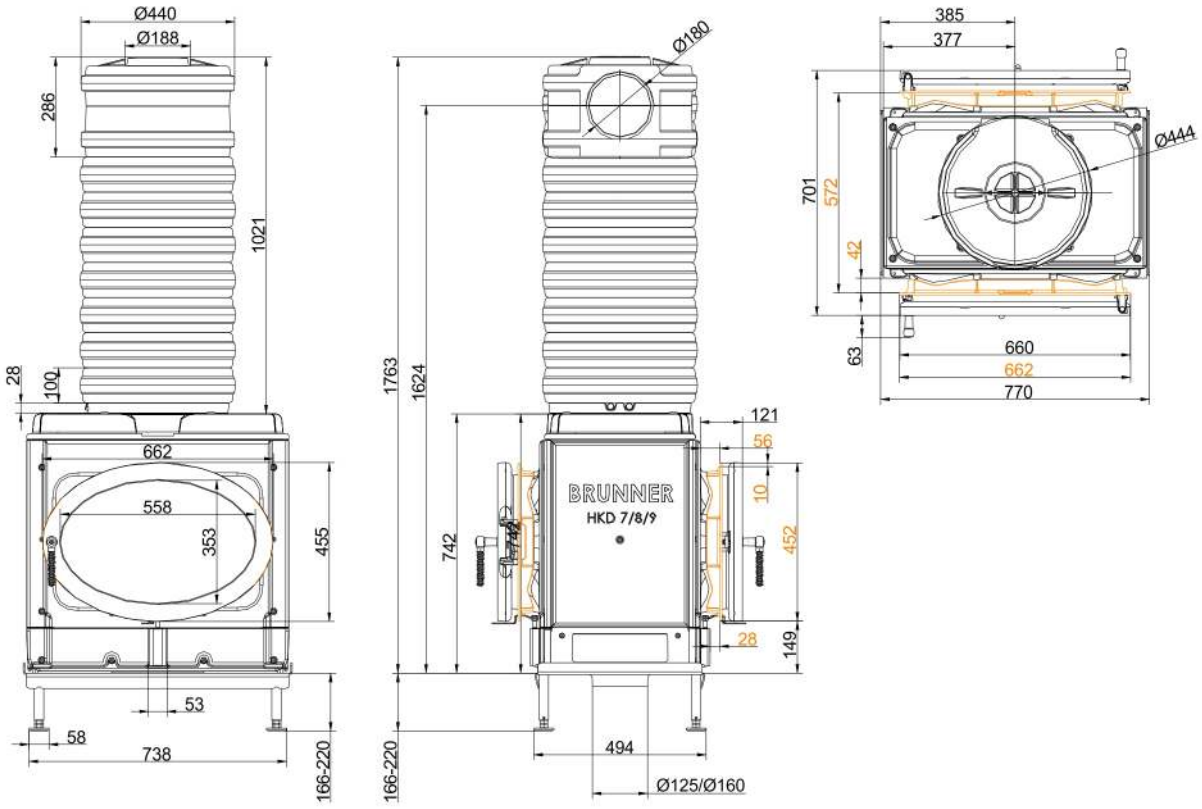

… mounting frame with MAS

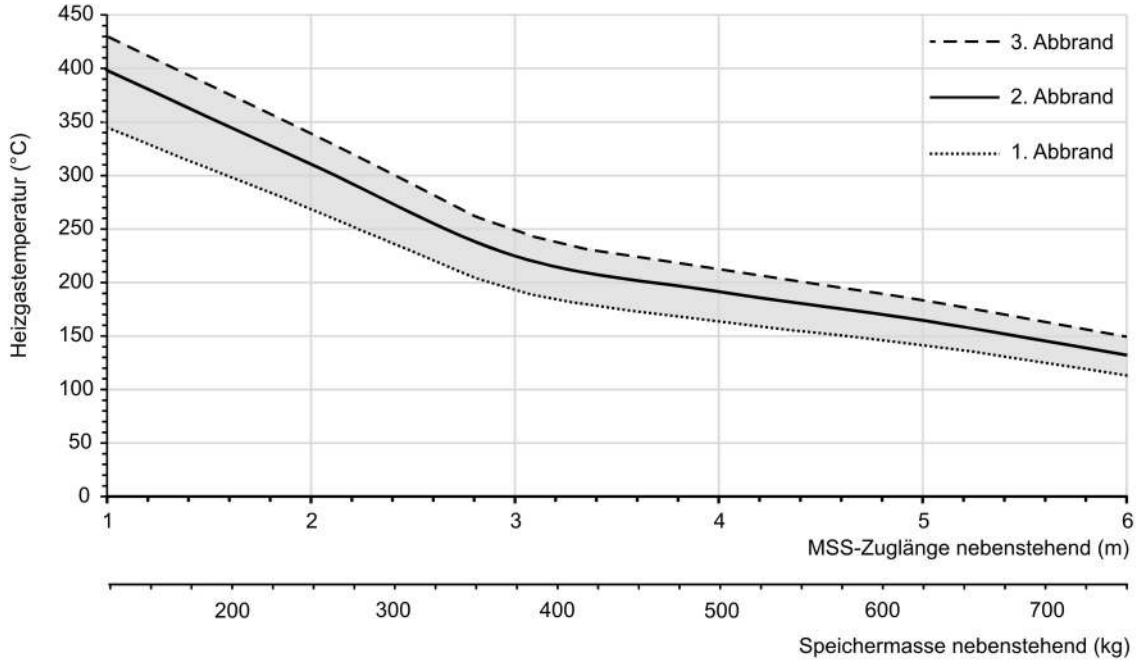

… design characteristics for adjacent storage mass

We suggest for CAD planing Palette CAD. Permanent updated drawings: www.brunner.de
Frames / front versions are marked colored.

State: 2018-01-31

Planning and installation - HKD 9 Tunnel

Tested according to		EN 13229 W	EN 13229 WA
Values measured at		Rated capacity	Accumulation
Suitable for all construction types according to rules		OK	OK
EEI		111.4	111.4
Data for functional demonstration			
Rated heat power	kW	9	-
Fire wood volume	kg/h	2.7	5.5
Combustion performance	kW	10.5	22
Flue gas mass flow	g/s	8.5	20
Outlet temperature (before heating surface)	°C	460	540
Flue gas temperature after:			
1 x adjoining cast iron radiator (GNF 8/10)	°C	180	215
7 x accumulation rings (MAS) [1]	°C	220	-
4,9 m ceramic accumulator [2]	°C	-	180
3,4 m accumulation stones (MSS) [2]	°C	-	190
Necessary supply pressure	Pa	12	15
Combustion air consumption	m^3/h	25	48
Combustion air connection Ø	mm	125 / 160	125 / 160
Heat distribution			
Insert / heat accumulator	%	30 / 40	30 / 40
Glass pane (single / double)	%	- / 30	- / 30
Cross-section of gratings [3]			
Supply air	cm^2	700 / 300 / 500	700 / 300 / 500
Warm air	cm^2	700 / 300 / 500	700 / 300 / 500
Minimal distances of the fireplace			
to insulation layer	cm	8	8
to mounting floor	cm	15	15
Thermal insulation without / with air gratings [4]			
Mounting wall	cm	12 / 10	12 / 10
Floor	cm	0	0
Ceiling	cm	22 / 16	22 / 16
Brick lining for combustible wall	cm	10	10
Weight			
Fireplace / combustion chamber	kg	304 / 46	
Meets requirement/limit values for:			
Germany/ Austria / Suisse / Norway		1.BImSchV (Stufe 2) / 15a BVG (2015) / LRV / -	

1) Damper flap recommended
2) Approximate value. Determination according to design characteristics for adjacent storage mass or proof of function provided by calculation
3) for fireplace inserts / flue gas pipe / metallic reheating surface
4) Values determined with upper air sections; stove cladding is heat emitting.

Ulrich Brunner GmbH
Zellhuber Ring 17 - 18
D-84307 Eggenfeldern
Telefonat: +49 / (0)87 21 / 7 71-0
Telefax: +49 / (0)87 21 / 7 71-100
info@brunner.de | www.brunner.de

BRUNNER®
made in germany.