TL-100

1545801
1545823

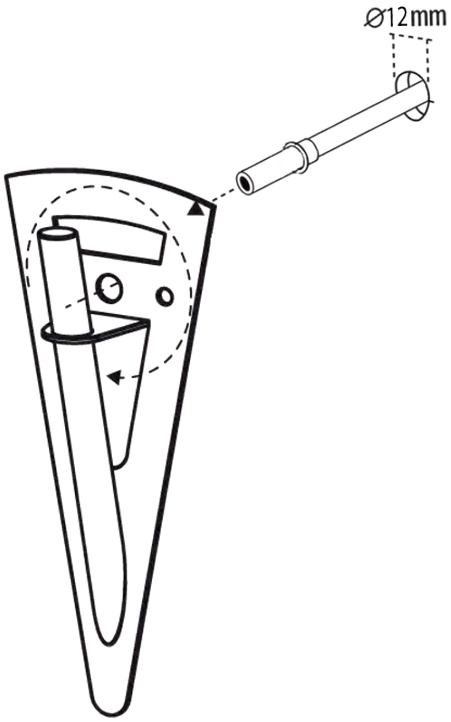

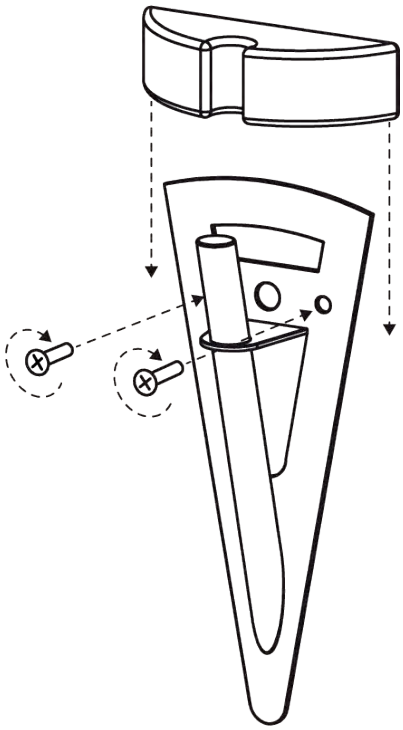

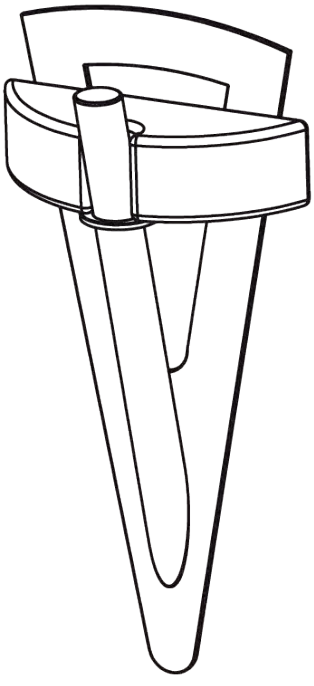

FIBER

1

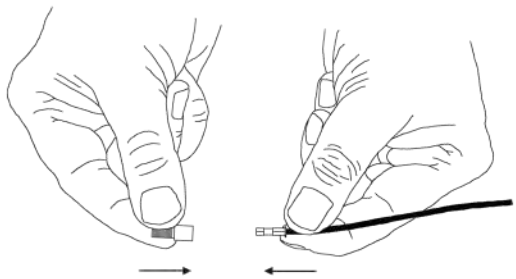

2



3

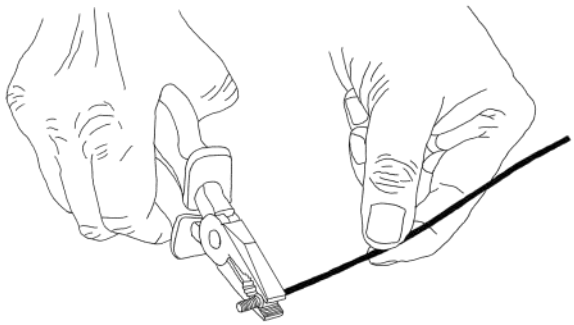

LED

