Wood burning heater Harvia Legend 300 black

WK300LD

The Harvia Legend wood burning heaters give you the ultimate sauna experience. The black steel frame has a mighty amount of stones inside, and as they heat up, you get a magnificent sauna bath even at a lower temperature. The large number of stones ensures good heat, even if the fire dies down in between.



Features

Net weight (kg) : 91.4

Stone amount (kg) : 260.0

H x W x D : 1040.0 x 600.0 x 660.0 mm

ID	GTIN	Power	Sauna room size min - max m3
WK300LD	6417659012393	23. kW	14.0-28.0



Spare parts

Product	ID	Pcs
Furnace grate	ZKIP-10	1
Legend 300 steel frame	WX504	1
Stove body Legend 300	ZH1-300LD	1
Harvia mark	ZH1-170	
Handle for ash box	ZKIP-680	
Packing box for Legend 300	ZSP-570	
	ZKIP-155	
Handle and screws, Chrome	SPZKIP-670	
Adjustable legs for LG150/SL	SPZKIP-918	
Hinge pin	SPZKIP-50	
Door for stove with knob, black	SP010	
Combustion air plates to fire chamber	SP526	
Ashtray black, sauna heaters	SP682	
Cap for smoke hole (Ø 50 mm)	SPZKIP-170	
Glass 184x210x4 mm Stoves 2006-, transparent	SPZTS-36	
Stove door with glass (from 2006)	SP048	
Cast-iron grating 135x290mm, sauna heaters	SPZKIP-10	

Technical details

Technical data	Type / attribute	WK300LD
	Color	Black
	Power output	23. kW
	Stone amount (kg)	260
Dimensions	Product width	600
	Product height	1040
	Product depth (mm)	660
	Net weight (kg)	91.4
	Gross weight	95.2
	Package width	670
	Package height	1060
	Package depth	620
Connections	Flue connection locations	Back, Top
	Chimney connection diameter	115
Safety and installation dimensions	Safety distance front (non-combustible materials)	680
	Safety distance front (combustible materials)	680
	Safety distance right side (combustible materials)	200
	Safety distance right side non-combustible materials	100
	Safety distance left side (combustible materials)	200
	Safety distance left side non-combustible materials	100
	Safety distance behind (non-combustible materials)	100
	Safety distance behind (combustible materials)	250
	Safety distance (Ceiling)	1000
	Room min. height(depends on connections and therefore from output, star/delta)	2050
	Installation opening height	2050



Technical details

Technical data	Type / attribute	WK300LD
	Installation opening width	1000
	Installation opening depth	1590

Technical images

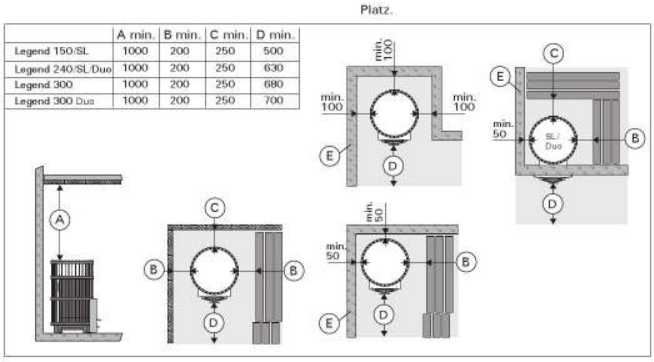

Safety distances (all dimensions in millimeters)

1.1. Stove Parts
A. Steel frame
B. Stove body
C. Rear connection opening
D. Upper connection opening
E. Soot opening
F. Stove door
G. Ash box
H. Flange (only Legend 240 Duo/300 Duo)
I. Fire chamber extension

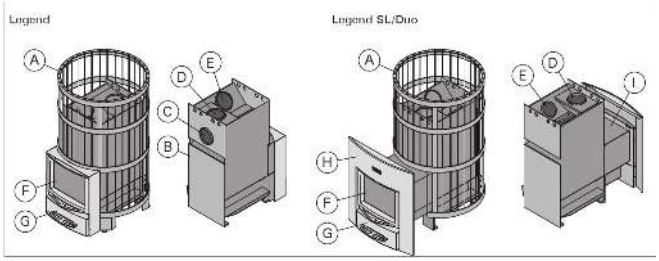

Stove parts. Note! Only use replacement parts recommended by the manufacturer. Unauthorised modification of the stove is prohibited.

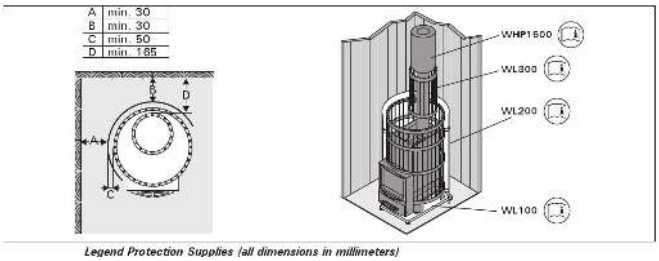

Legend Protection Supplies (all dimensions in millimeters)