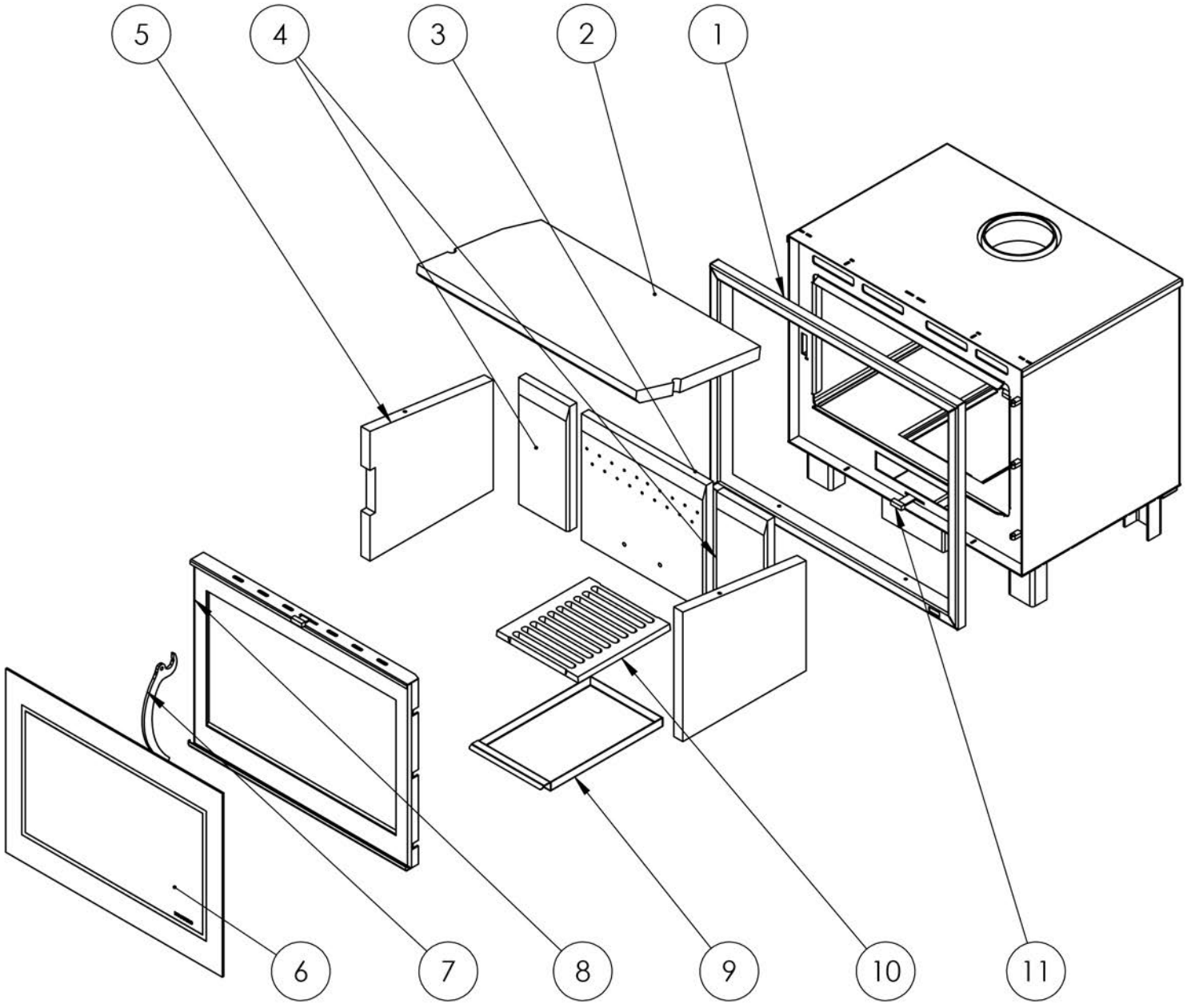

N°	Denomination	UD
1	Frame	1
2	Deflector of vermiculite	2
3	Back vermiculite 1	1
4	Back vermiculite 2	2
5	Side vermiculite (door handle)	1
6	Front glass	1
7	Door handle	1
8	Door	1
9	Ashtray	1
10	Grill	1
11	Regulator of air intake	1

PANADERO