

focus®
cheminées contemporaines

# BOAFOCUS MURAL

## INSTALLATION, SERVICING AND USER INSTRUCTIONS

# Content


## General Notes ..... 02

## User instructions ..... 03

- **EMERGENCY GAS ISOLATION** ..... 03
- **FIRST TIME OF OPERATION** ..... 03
- **OPERATING INSTRUCTIONS** ..... 03
  - A. GENERAL NOTES
  - B. SETTING THE ELECTRONIC CODE (first time use only)
  - C. SETTING FAHRENHEIT OR CELSIUS
  - D. SETTING THE TIME
  - E. CHILD PROOF
  - F. MANUAL MODE (handset)
  - G. DESIGNATED LOW FIRE AND HIGH FIRE
  - H. COUNTDOWN TIMER
  - I. MODES OF OPERATION
  - J. THERMOSTATIC MODE
  - K. PROGRAM MODE
  - L. AUXILIARY FEATURE
  - M. ECO MODE
- **MANUAL TURN OFF** ..... 08
- **CLEANING AND MAINTENANCE** ..... 08

## Installation instructions ..... 09

- **GAS CONNECTION** ..... 09
- **VENTILATION** ..... 09
- **APPLIANCE INSTALLATION** ..... 09
- **FLUE CONNECTION** ..... 09
  - A. GENERAL NOTES
  - B. TIMBER FRAME CONSTRUCTION
  - C. CARPORT OR BUILDING EXTENSION
  - D. BASEMENTS, LIGHTWELLS AND RETAINING WALLS
  - E. TERMINAL LOCATIONS
  - F. HORIZONTAL WALL VENT TERMINATION TYPE C11
  - G. VERTICAL ROOF VENT TERMINATION C31
  - H. FLUE RESTICTOR IDENTIFICATION
- **FUEL BED ARRANGEMENTS** ..... 12
  - A. FIREBOX ACCESS
  - B. LOG LAY NATURAL
  - C. LOG LAY LPG
- **COMMISSIONING THE APPLIANCE** ..... 17
  - A. PILOT IGNITION CHECK
  - B. MAIN BURNER CHECK
  - C. PRESSURE CHECK

## Servicing ..... 18

- **CLEANING THE CERAMICS** ..... 18
- **SERVICING THE BURNER** ..... 18
- **SPARE PARTS** ..... 18

## Technical Information ..... 19

- **COUNTRIES OF USE** ..... 19
- **TECHNICAL DATA** ..... 20
- **DIMENSIONS** ..... 21

## Appendix ..... 22

- **MERTIK FAULT FINDING CHART** ..... 22
- **WIRING DIAGRAM** ..... 26
- **DECLARATION OF CONFORMITY** ..... 27


# General Notes

This Focus gas appliance is a High Efficiency, Balanced Flue Live Fuel Effect appliance. It provides radiant and convected heat using the latest burner technology.

Before Installation, check that the local distribution conditions, nature of the gas and pressure, and adjustment of the appliance are compatible.

This appliance is intended for use on a gas installation with a governed meter.

This Gas Installation may only be installed by a registered professional competent person (Gas Safe installer in the UK). The installation must adhere to the requirements of the local and national Building regulations and national standards. The installation manual must also be followed.

Ensure that the Flue Terminal is not in any way obstructed and is clear of vegetation, i.e. trees, shrubs etc. and that no objects are leant against the terminal or guard.

Always clean the Window Panel before the fire is ignited. Any finger prints must be removed, as these will be burnt into the glass and will be un-removable.

Do not operate this appliance if the glass panel has been broken (or cracked), removed or with firebox access panels open.

Only flue approved by Focus for this appliance may be used.

This appliance is a balanced flue product and is room sealed and as such requires no additional ventilation for operation. However an adequate supply of fresh air to maintain temperatures and a comfortable environment is recommended.

This appliance is designed as a heating appliance, and as such will get very hot in operation; all surfaces (except the controls and access door) are considered to be working surfaces and as such should not be touched. The front windows and surrounds are not considered to be fully secure guards against accidental contact. It is recommended that an approved fire screen be used if children, the elderly or persons with limited mobility are to be present in the same area.

Do not place curtains, laundry, furniture etc. within a safe distance of 300mm of this appliance.

Do not attempt to burn rubbish on this appliance.

If this appliance is extinguished, on purpose or other, no attempt to relight should be made within 3 minutes.

# User instructions

## EMERGENCY GAS ISOLATION

In the event of a gas leak or if gas is smelt, the appliance must be isolated. This is done by turning OFF the gas at the Isolation Tap. This Isolation Tap is located in the foot of the appliance.

## FIRST TIME OF OPERATION

Before igniting the appliance, ensure that all packaging, safety stickers and any protective wrapping have been removed, and that the glass has been cleaned, including all fingerprints from the glass.
Ensure that the room is adequately ventilated the first time that the appliance is ignited; we would recommend opening windows if possible. Run the appliance at full setting for a few hours so that the paint gets an opportunity to fully cure. During this period it is possible for some fumes and vapours to be given off. We would recommend keeping children and pets out of the area at this time.

## OPERATING INSTRUCTIONS

### A. GENERAL NOTES

*NOTICE*

Wiring of valve and receiver must be completed before starting ignition. Failure to do so could damage the electronics.

**Batteries – Handset**
- Low battery indicator on handsets.

**Batteries – Receiver**
- Low battery indication: frequent beeps for 3 seconds when motor turns.
- An AC mains adapter may be used instead of batteries.
- The module for fan speed control and light/dimmer includes mains power together with batteries in the receiver for automatic backup in case of power outage.

**▲ WARNING**

- Without using a mains adapter, battery replacement is recommended at the beginning of each heating season.
- Old or dead batteries should be removed immediately. If left in the unit the batteries can overheat, leak, and / or explode.
- Do NOT expose batteries (including during storage) to direct sunlight, excessive heat, fire, moisture, or severe impact. Each of these conditions can cause the batteries to overheat, leak, and / or explode.
- Batteries must be kept within their recommended temperature limits. (Ambient battery temperature range: 32 °F to 131 °F [0 °C to 55 °C].)
- New and old batteries and different brands of batteries should not be used together. Mixing of various batteries can cause the batteries to overheat, leak, and / or explode.

**Software Version**
Press ⓢ and ▲ buttons simultaneously. Software version is displayed.

**Handset Model Number**
Press ⓢ and ▼ buttons simultaneously. Handset model number is displayed.

**Deactivate Functions**
1. Install batteries. All icons are displayed and flashing.
2. While the icons are flashing, press the relevant function button and hold for 10 sec.
3. The function icon will flash until deactivation is complete. Deactivation is complete when the function icon and two horizontal bars are displayed.

**NOTE:** If a deactivated button is pressed, there is no function, and two horizontal bars are displayed.

**NOTE:** Deactivation remains in effect after change of batteries.

**Activate Functions**
1. Install batteries. All icons are displayed and flashing.
2. To activate a function, press the relevant button and hold for 10 sec.
3. The function icon will continue to flash until activation is complete. Activation is complete when the function icon is displayed.

**The following Functions can be Deactivated / Activated**
- CHILD PROOF
- PROGRAM MODE
- THERMOSTATIC MODE (also deactivates PROGRAM MODE)
- ECO MODE
- LIGHT / DIMMER OPERATION
- CIRCULATING FAN OPERATION
- AUXILIARY FEATURE
- COUNTDOWN TIMER

### B. SETTING THE ELECTRONIC CODE (First time use only)

**Radio Frequency Handset**
A code is selected automatically for all Mertik Maxitrol electronics from among 65,000 codes available. The receiver must be paired with the handset.

The receiver has to learn the handset code:
Press and hold the receiver's reset button until you hear two (2) beeps. After the second, longer beep, release the reset button. Within the subsequent 20 seconds press the ▼ button on the handset until you hear two (2) short beeps confirming the code is set.

**NOTE:** This is a one time setting only, and it is not required when changing the batteries In the handset or receiver.

# User instructions

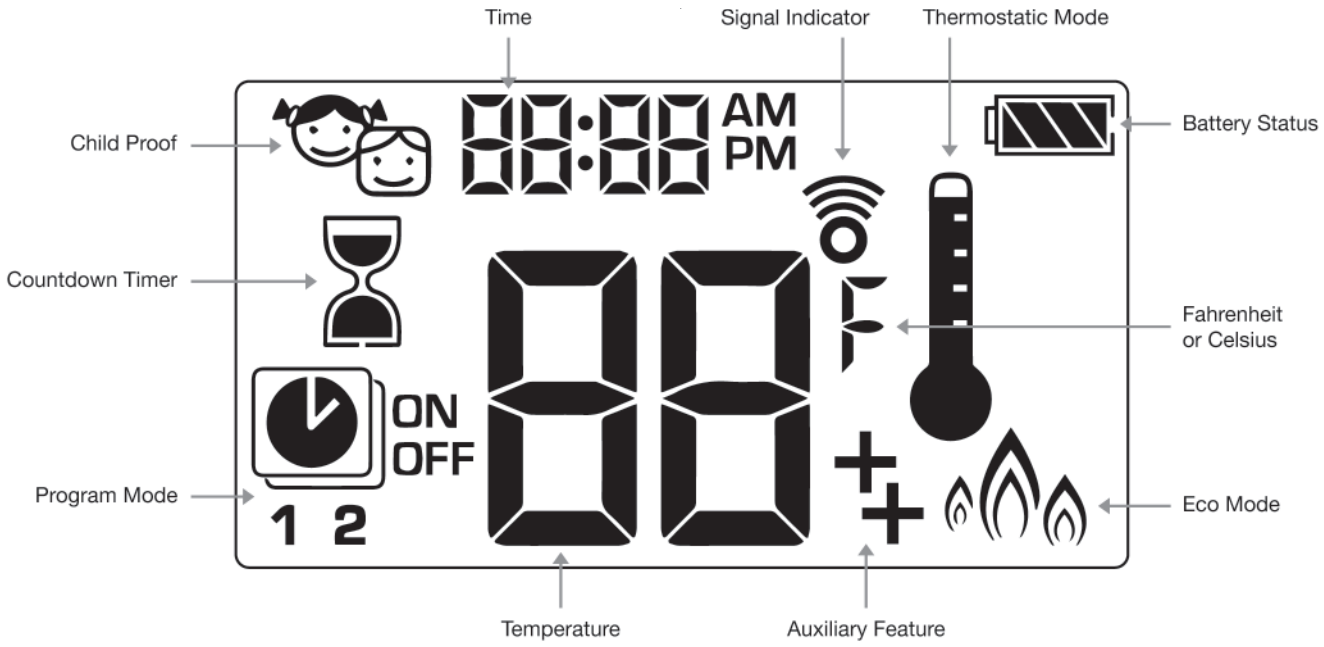


*Figure 01: 8-symbol Display*

## C. SETTING FAHRENHEIT OR CELSIUS



To change between °C and °F, press ⏻ and ⏳ buttons simultaneously.

**NOTE:** Choosing °F results in a 12 hour clock.
Choosing °C results in a 24 hour clock.

## D. SETTING THE TIME

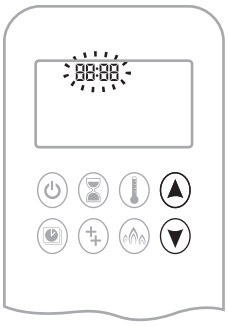

1. Press ▲ and ▼ buttons simultaneously. Day flashes.
2. Press ▲ or ▼ button to select a number to correspond with the day of the week (e. g. 1 = Monday, 2 = Tuesday, 3 = Wednesday, 4 = Thursday, 5 = Friday, 6 = Saturday, 7 = Sunday).
3. Press ▲ and ▼ buttons simultaneously. Hour flashes.
4. To select hour press ▲ or ▼ button.
5. Press ▲ and ▼ buttons simultaneously. Minutes flash.
6. To select minutes press ▲ or ▼ button.
7. To confirm press ▲ and ▼ buttons simultaneously or wait.

## E. CHILD PROOF



ON:
To activate press ⏻ and ▼ buttons simultaneously. 🔒 displayed and the handset is rendered inoperable, except for the off function.

OFF:
To deactivate press ⏻ and ▼ buttons simultaneously. 🔒 disappears.

## F. MANUAL MODE (handset)

*NOTICE*

BEFORE OPERATING
1 Make sure MANUAL knob on the GV60 valve is in the **ON**, full counterclockwise ↶ position.
2. Place the ON/OFF switch (if equipped) in the **I** (ON) position.

**TO TURN ON FIRE**

**▲ WARNING**

When pilot ignition is confirmed, motor turns automatically to maximum flame height.

# User instructions

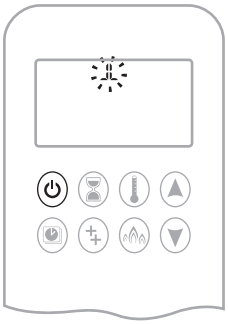

**Handset One-Button Operation**
(Default Setting)
- Press ⏻ button until two short beeps and a blinking series of lines confirms the start sequence has begun; release button.
- Main gas flows once pilot ignition is confirmed.
- Handset automatically goes into Manual Mode after main burner ignition.

*NOTICE*

Change from one-button to two-button ignition operation by pressing and holding ⏻ button for 10 sec. immediately after installing batteries. **ON** is displayed and **1** is flashing. When change is complete **1** will change to **2**.

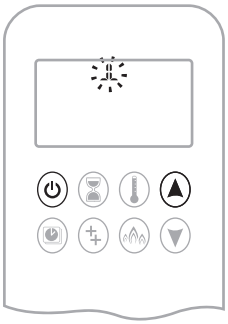

**Handset Two-Button Operation**
- Press ⏻ and ▲ button simultaneously until two short beeps and a blinking series of lines confirms the start sequence has begun; release buttons.
- Main gas flows once pilot ignition is confirmed.
- Handset automatically goes into Manual Mode after main burner ignition.

*NOTICE*

Change from two-button to one-button ignition operation by pressing and holding ⏻ button for 10 sec. immediately after installing batteries. **ON** is displayed and **2** is flashing. When change is complete **2** will change to **1**.

**▲ WARNING**

If the pilot does not stay lit after several tries, turn the main valve knob to **OFF** (p. 08).

**STANDBY MODE (PILOT FLAME)**

**Handset**
- Press and hold ▼ button to set appliance to pilot flame.

**TO TURN OFF FIRE**




**Handset**
- Press ⏻ button to turn OFF.

**NOTE:** A new ignition is possible after the OFF icon stops flashing.

**FLAME HEIGHT ADJUSTMENT**




**Handset**
- To increase flame height press and hold ▲ button.
- To decrease flame height or to set appliance to pilot flame, press and hold ▼ button.

## G. DESIGNATED LOW FIRE AND HIGH FIRE

**NOTE:** Backlight must be on for high fire and low fire double-click operation.




- To go to low fire, double-click ▼ button. LO is displayed.

**NOTE:** Flame goes to high fire first before going to low fire.




- To go to high fire, double-click ▲ button. HI is displayed.

**▲ WARNING**

If the appliance will not operate, turn the main valve knob to **OFF** (p. 08).

# User instructions

## H. COUNTDOWN TIMER

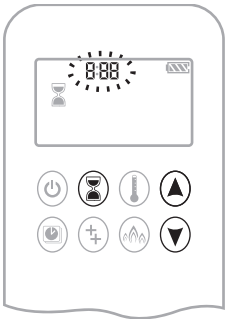

ON/SETTING:
1. Press and hold ⏳ button until ⏳ displayed, and hour flashes.
2. To select hour press ▲ or ▼ button.
3. To confirm press ⏳ button. Minutes flash.
4. To select minutes press ▲ or ▼ button.
5. To confirm press ⏳ button or wait.

OFF:
Press ⏳ button, ⏳ and countdown time disappear.

**NOTE:** At end of countdown time period, the fire shuts off. The Countdown Timer only works in Manual, Thermostatic, and Eco Modes. Maximum countdown time is 9 hours and 50 minutes.

## I. MODES OF OPERATION



**Thermostatic Mode**
The room temperature is measured and compared to the set temperature. The flame height is then automatically adjusted to achieve the set temperature.

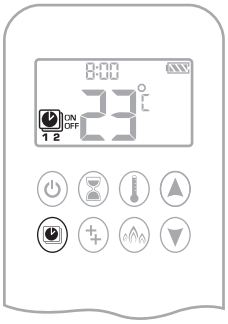

**Program Mode**
PROGRAMS 1 and 2, each can be programmed to go on and off at specific times at a set temperature.



**Eco Mode**
Flame height modulates between high and low. If the room temperature is lower than the set temperature, the flame height stays on high for a longer period of time. If the room temperature is higher than the set temperature, the flame height stays on low for a longer period of time. One cycle lasts approx. 20 min.

## J. THERMOSTATIC MODE



ON:
Press 🌡 button. 🌡 displayed, preset temperature displayed briefly, and then room temperature displayed.

OFF:
1. Press 🌡 button.
2. Press ▲ or ▼ button to enter Manual Mode.
3. Press 🕐 button to enter Program Mode.
4. Press 🔥 button to enter Eco Mode.



SETTING:
1. Press 🌡 button and hold until 🌡 displayed, temperature flashes.
2. To adjust set temperature press ▲ or ▼ button.
3. To confirm press 🌡 button or wait.

## K. PROGRAM MODE

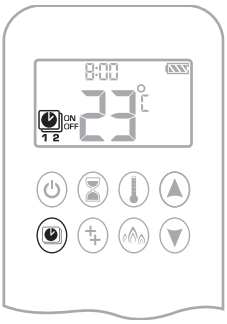

ON:
Press 🕐 button. 🕐, **1** or **2** , **ON** or **OFF** displayed.



OFF:
1. Press 🕐 or ▲ or ▼ button to enter Manual Mode.
2. Press 🌡 button to enter Thermostatic Mode.

**NOTE:** The set temperature for Thermostatic Mode is the temperature for the on time in Program Mode. Changing the Thermostatic Mode set temperature also changes the on time temperature in Program Mode.

# User instructions

**Default settings:**
ON TIME (Thermostatic) TEMPERATURE: 21 °C (70 °F)
OFF TIME TEMPERATURE: "- - -" (pilot flame only)

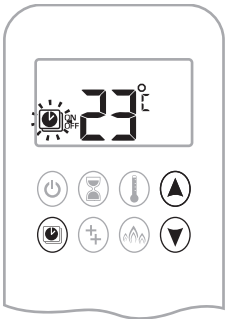

TEMPERATURE SETTING:
1. Press ⏻ button and hold until ⏻ flashes. **ON** and set temperature (setting in Thermostatic Mode) displayed.
2. To continue press ⏻ button or wait. ⏻, **OFF** displayed, temperature flashes.
3. Select off temperature by pressing the ▲ or ▼ button.
4. To confirm press ⏻ button.

**NOTE:** The on (Thermostatic) and off set temperatures are the same for each day.

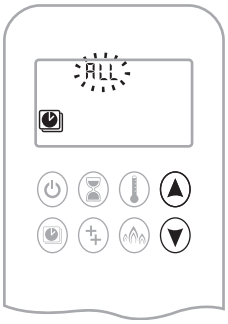

DAY SETTING:
5. ALL flashes. Press ▲ or ▼ button to choose between ALL, SA-SU, 1, 2, 3, 4, 5, 6, 7.
6. To confirm press ⏻ button.

**ALL selected**

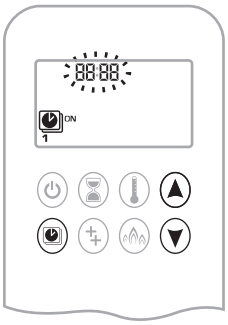

ON TIME SETTING (PROGRAM 1):
7. ⏻, **1**, **ON** displayed, ALL is displayed shortly, and **hour** flashes.
8. To select hour press ▲ or ▼ button.
9. To confirm press ⏻ button. ⏻, **1**, **ON** displayed, ALL displayed shortly, and **minutes** flash.
10. To select minutes press ▲ or ▼ button.
11. To confirm press ⏻ button.

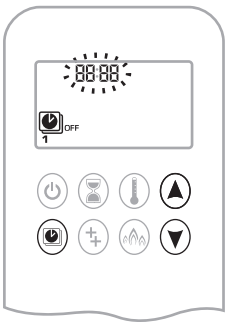

OFF TIME SETTING (PROGRAM 1):
12. ⏻, **1**, **OFF** displayed, ALL is displayed shortly, and **hour** flashes.
13. To select hour, press ▲ or ▼ button.
14. To confirm press ⏻ button. ⏻, **1**, **OFF** displayed, ALL displayed shortly, and **minutes** flash.
15. To select minutes press ▲ or ▼ button.
16. To confirm press ⏻ button.

**NOTE:** Either continue to PROGRAM 2 and set on and off times or stop programming at this point, and PROGRAM 2 remains deactivated.

**NOTE:** PROGRAM 1 and 2 use the same on (Thermostatic) and off temperatures for ALL, SA-SU and Daily Timer ( 1, 2, 3, 4, 5, 6, 7 ). Once a new on (Thermostatic) and / or off temperature has been set, that temperature becomes the new default setting.

**NOTE:** If ALL, SA-SU or Daily Timer are programmed for PROGRAM 1 and PROGRAM 2 on and off times, these become the new default times. The batteries must be removed to clear the PROGRAM 1 and PROGRAM 2 on and off times and temperatures.

**SA-SU or Daily Timer ( 1, 2, 3, 4, 5, 6, 7 ) selected**

- Set on time and off time using same procedure as "ALL selected" (above).
- SA-SU : Set on time and off time for both Saturday and Sunday.
- Daily Timer: Unique on and off times may be set for a single day of the week, for multiple days of the week, or for every day of the week.
- Wait to finish setting.

## L. AUXILIARY FEATURE

Upon ignition burner 1 is on and burner 2 is in the last setting.

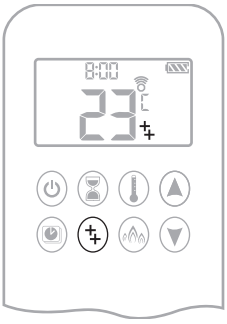

ON:
To switch a burner **ON**, press the ϟ button. ϟ displayed.

OFF:
To switch the burner **OFF**, press the ϟ button. ϟ disappears.

**NOTE:** The latching solenoid valve cannot operate manually. If the receiver battery runs down it will remain in the last operating position.

## M. ECO MODE



ON:
Press ♨ button to enter Eco Mode. ♨ displayed.

OFF:
Press ♨ button. ♨ disappears.

# User instructions

## MANUAL TURN OFF

In the event that the appliance needs to be turned OFF manually, for instance, if the remote control is lost or the batteries become totaly flat, the control valve must be accessed and the switch flipped to OFF (marked “0”).
The picture below shows the control valve.

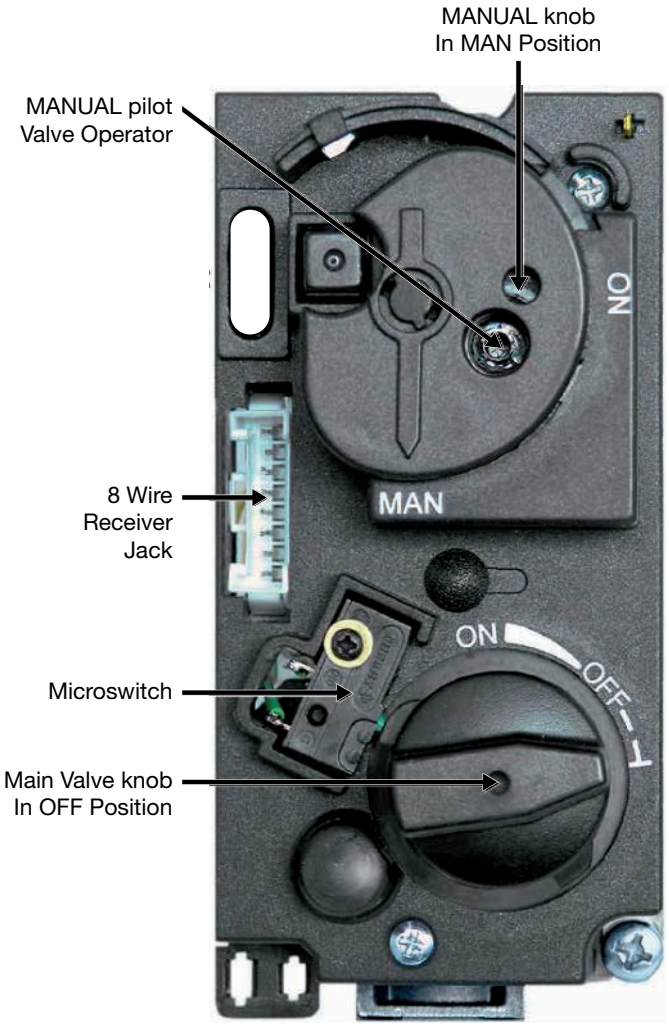


The control valve is located in the foot of the appliance.

## CLEANING AND MAINTENANCE

This appliance should be inspected and serviced once a year by a qualified, competent and registered person. The inspection and maintenance must at least ensure that the appliance is working correctly and safely. It is advisable to clean the appliance of any dust and debris before regularly during the heating season and especially if the appliance has not been used for some time. This can be done with a soft brush and a vacuum cleaner or a damp cloth and if required a non-abrasive cleaning agent. Do not use corrosive or abrasive substances to clean the appliance.

# Installation instructions

Before commencing Installation, confirm that the details on the appliance data plate correspond to the local distribution conditions, gas type and pressure to which the appliance is to be installed.

Ensure that gas supply and supply pipe is capable of delivering the required volume and pressure of gas and is in accordance with the rules in force.

## GAS CONNECTION

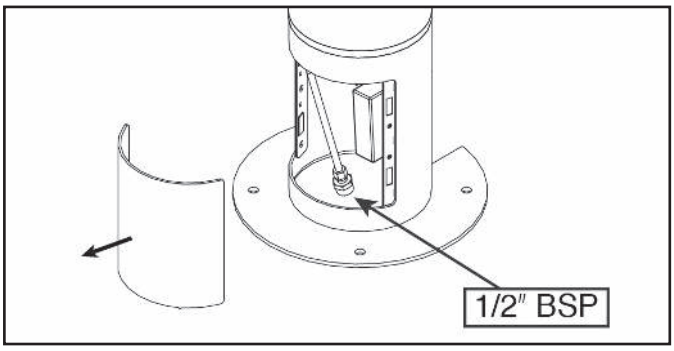


## VENTILATION

This appliance is a Balanced Flue room sealed appliance, and as such needs no additional ventilation. However an adequate supply of fresh air to maintain temperatures and a comfortable environment is recommended.

This appliance may be installed in a completely sealed or mechanically ventilated house.

## APPLIANCE INSTALLATION

Determine the position required for the appliance.

Create a gas connection for the appliance in approximately the correct location for the gas controls.

The gas controls are connected to the Burner of the appliance.

This appliance must be securely fixed to the floor using the fixings built into the base of the appliance.

Do not make any adjustments to the appliance.

The appliance and Flue system should be fitted with a minimum clearance of 500mm from any combustible objects or materials; this includes any combustible materials used for the fireplace construction.

As this is a room sealed appliance and the appliance stands appropriately and is securely fixed to the floor, a hearth is not required for this appliance.

## FLUE CONNECTION

### A. GENERAL NOTES

This appliance may be installed with a roof terminal (C31) or a wall terminal (C11). This appliance may only be used with Balanced Flue (otherwise known as Concentric Flue) parts as specified by Focus. The Focus specified flue parts have been approved with the appliance. If the appliance is installed on non-Focus approved parts, Focus cannot guarantee or accept and responsibility for the proper and safe working of the appliance.

The flue system must be constructed from the appliance upwards, with all joints being fully locked and sealed using the Focus specified parts.

### B. TIMBER FRAME CONSTRUCTION

Whilst it is possible to install room-sealed appliances in timber frame properties, great care needs to be taken to ensure that the flue assembly does not interfere with the weather proofing qualities of any outer wall which it may penetrate. Before attempting this work, further details need to be referenced, (e.g. “Gas Installations in Timber Frame Buildings” from the CORGI installer series in the UK).

### C. CARPORT OR BUILDING EXTENSION

Where a flue terminal is sited within a carport or building extension, it should have at least two completely open and unobstructed sides. The distance between the lowest part of the roof and the top of the terminal should be at least 600mm.

**NOTE:** A covered passageway should not be treated as a carport. Flues should not be sited in a covered passageway between properties.

### D. BASEMENTS, LIGHTWELLS AND RETAINING WALLS

Flue terminals should not be sited within the confines of a basement area, light well or external space formed by a retaining wall, unless steps are taken to ensure the products of combustion can disperse safely at all times. It may be possible to install this Balanced Flue system in such a location provided that it is not sited lower than 1m from the top level of that area to allow combustion products to disperse safely.

Flue terminals should be sited to ensure total clearance of the combustion products in accordance with the included information.

When the products of combustion are discharged, they should not cause a nuisance to adjoining or adjacent properties and they should be positioned so that damage cannot occur to other parts of the building. If the outer wall surface is constructed of combustible material, a non-combustible plate should be fitted behind the terminal projecting 25mm beyond the external edges of the terminal.

# Installation instructions

## E. TERMINAL LOCATIONS

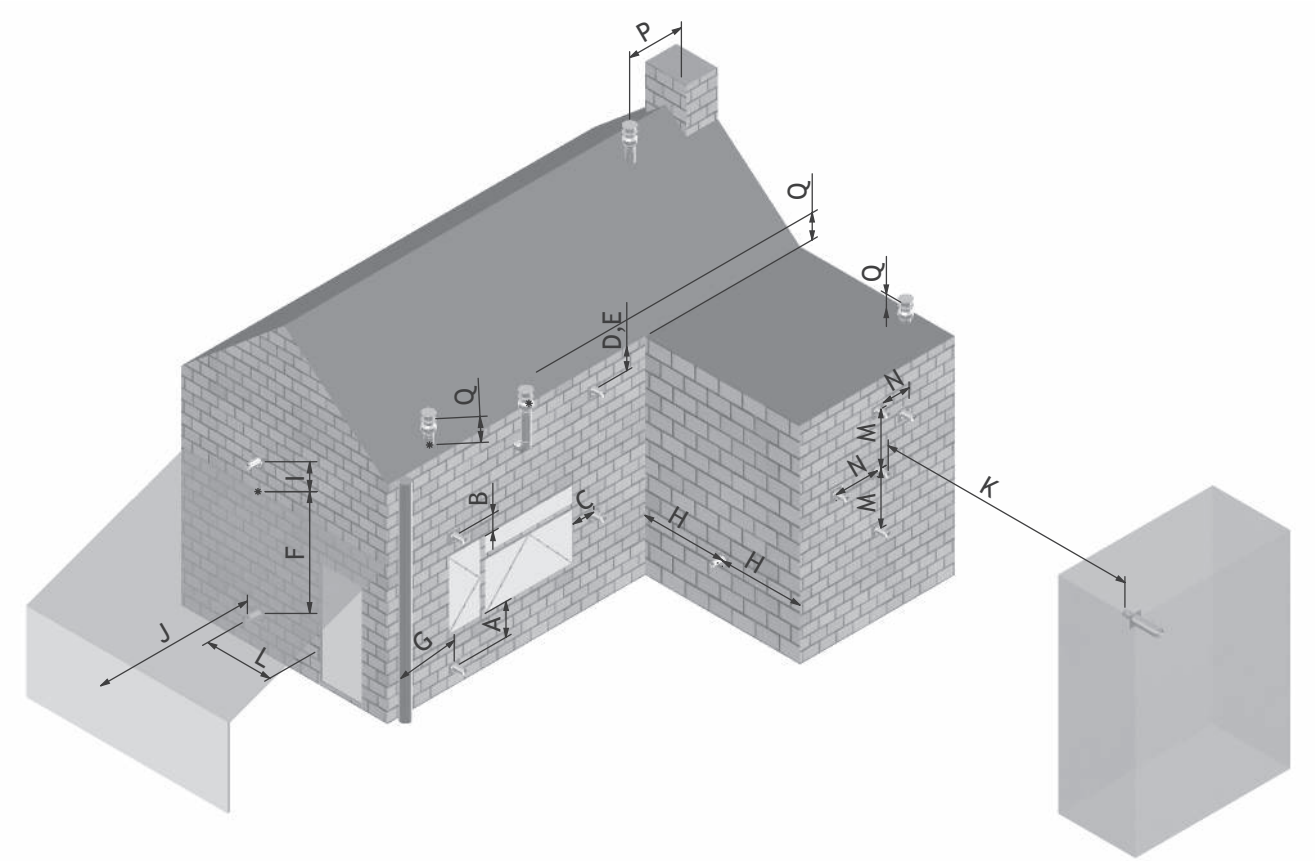


| Dimension | Terminal Position | Distance (mm) |
|---|---|---|
| A* | Directly below an opening, air brick, opening window etc. | 600 |
| B | Above an opening, air brick, opening window etc. | 600 |
| C | Adjacent to an opening, air brick, opening window etc. | 600 |
| D | Below gutters, soil pipes or drain pipes | 300 |
| E | Below eaves | 300 |
| F | Below balconies of car port roof | 600 |
| G | From a vertical drain pipe or soil pipe | 300 |
| H | From an internal or external corner | 600 |
| I | Above ground roof or balcony level | 300 |
| J | From a surface facing the terminal | 600 |
| K | From a terminal facing the terminal | 600 |
| L | From an opening in the car port (e.g. door , window into the dwelling) | 1200 |
| M | Vertically from a terminal on the same wall | 1500 |
| N | Horizontally from a terminal on the same wall | 300 |
| P | From a vertical structure on the roof | 600 |
| Q | Above intersection with roof | 300 |

* I addition, the terminal should not be nearer than 300mm to an opening in the building fabric formed for the purpose of accommodating a built in element such as a window frame.

# Installation instructions

## F. HORIZONTAL WALL VENT TERMINATION TYPE C11

Flue sizing:
- Ø80/130 Connector on Appliance for Poujoulat DUOGAS concentric flue system.
- Ø80/125 Adaptor for Metaloterm Ontop or Muelink & Grol concentric flue systems.
- Ø80/130 - Ø80/125 Maybe used Through-out

Flue Terminal:
- Ø80/130 (Poujoulat DUOGAS) ;
- Ø80/125 (Metaloterm Ontop or Muelink & Grol).

Maximum pipe extension, for outside wall (H).

Boafocus = 3 X Vertical Pipe Rise (V). For Ø80/130 flue.

Maximum Permissable run (H) see table below.

| Vertical Flue Rise (V) metres | Max. Horizontal Flue Run, (H) m for Ø100/150 flue |
|---|---|
| 0.5 | 1.5 |
| 1 | 3 |
| 1.5 | 4.5 |
| 2 | 6 |
| 2.5 | 7.5 |
| 3 | 9 |
| 3.5 | 10.5 |
| 4 | 12 |
| 4.5 | 12 |
| 5 | 12 |
| 5.5 | 12 |
| 6.5 | 12 |
| 7 | 12 |
| 7.5 and over | 12 |

Minimum Vertical Flue Height: 0.5m

Flue Restrictors to be fitted:
- Vertical Flue Height < 2m, Std Restrictor.
- Vertical Flue Height = 2-5m, 9mm Restrictor.
- Vertical Flue Height > 5m, std Restrictor.

## G. VERTICAL ROOF VENT TERMINATION C31

Flue sizing:
- Ø80/130 Connector on Appliance for Poujoulat DUOGAS concentric flue system.
- Ø80/125 Adaptor for Metaloterm Ontop or Muelink & Grol concentric flue systems.
- Ø80/130 - Ø80/125 Maybe used Through-out

Flue Terminal:
- Ø80/130 (Poujoulat DUOGAS) ;
- Ø80/125 (Metaloterm Ontop or Muelink & Grol).

Minimum Vertical Flue Height: 0.5m
Maximum Vertical Flue Height: 15m

Flue calculations when using elbows (0-90° permissible), total flue length maximum = 15m and each bend will equate to ½m, Vertical rise (V) must be at least twice the Horizontal run (R), i.e. V=2H (or H/V≤½).

Flue Restrictors to be fitted:
- Vertical Rise < 1m, Std Restrictor.
- Vertical Rise = 1-6m, 9mm Restrictor.
- Vertical Rise > 6m, std Restrictor.

## H. FLUE RESTICTOR IDENTIFICATION




| Restrictor | Ø |
|---|---|
| Standard | 27,65 |
| 9 | 18,3 |

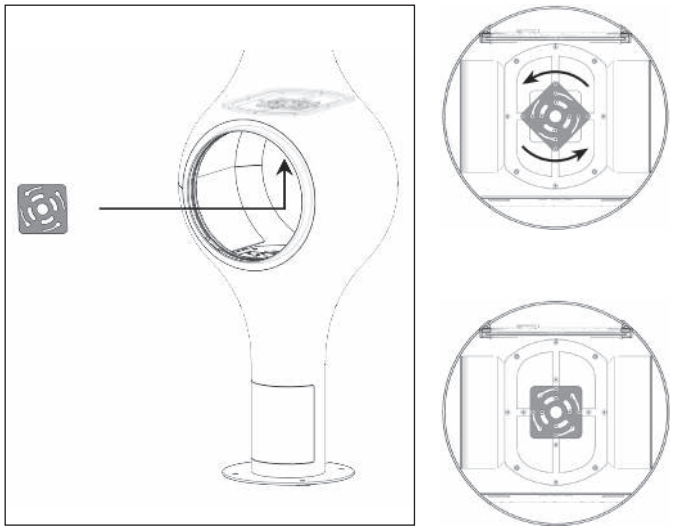

# Installation instructions

## FUEL BED ARRANGEMENTS

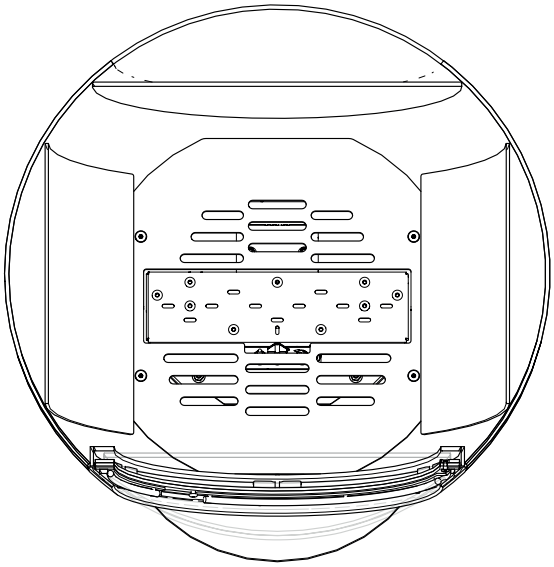

**When arranging the Media into the Firebed, it is imporant that the Pilot area is kept clear and that no Media enters the Pilot shield.** The Pilot area includes the pilot shield and the top of the burner to the first slot inside the fence of the pilot shield.

**When comissioning or servicing the Appliance Cross Lighting must be checked to ensure smooth lighting of the main burner from the Pilot Flame and smooth lighting of the effect burners from the main Burner.**

### A. FIREBOX ACCESS

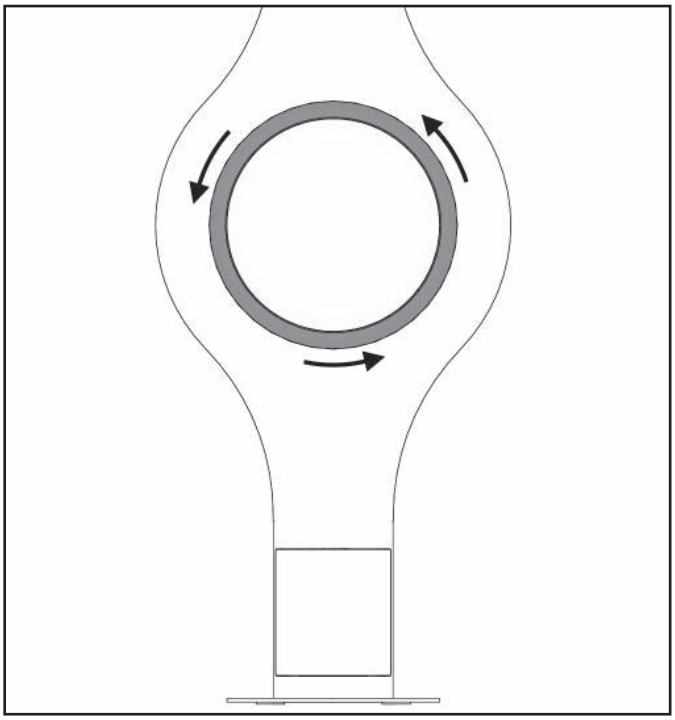

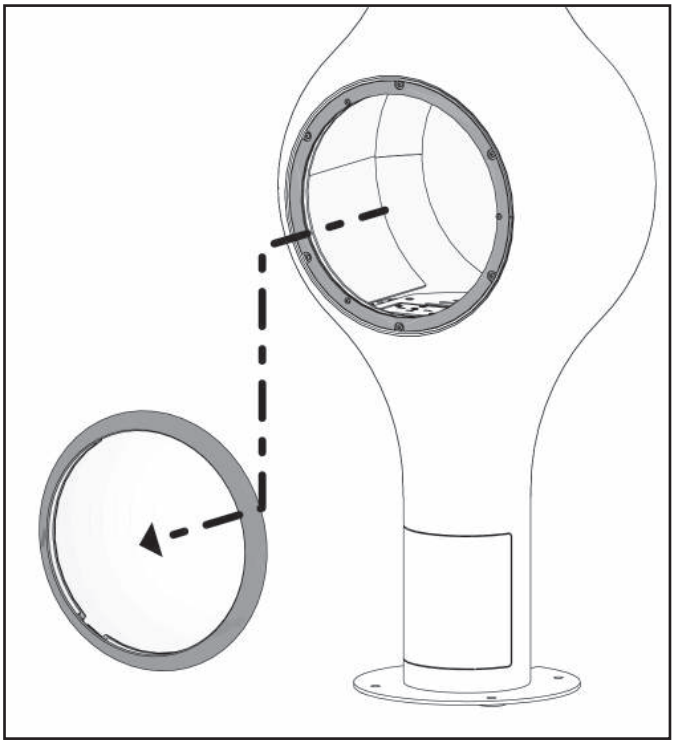

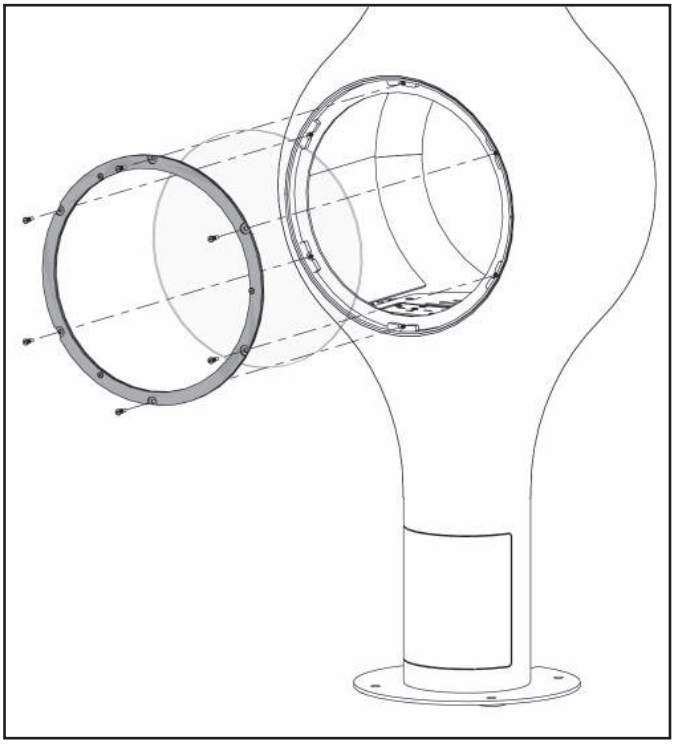

# Installation instructions

## B. LOG LAY NATURAL

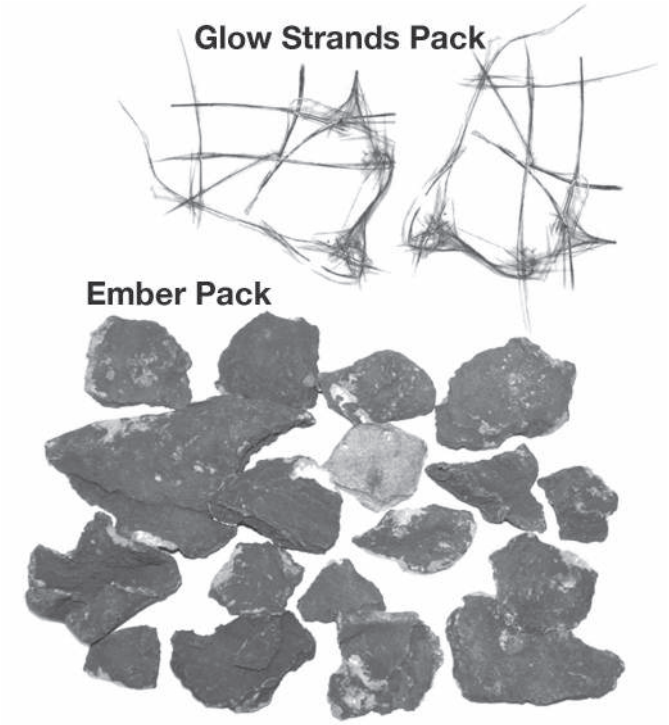


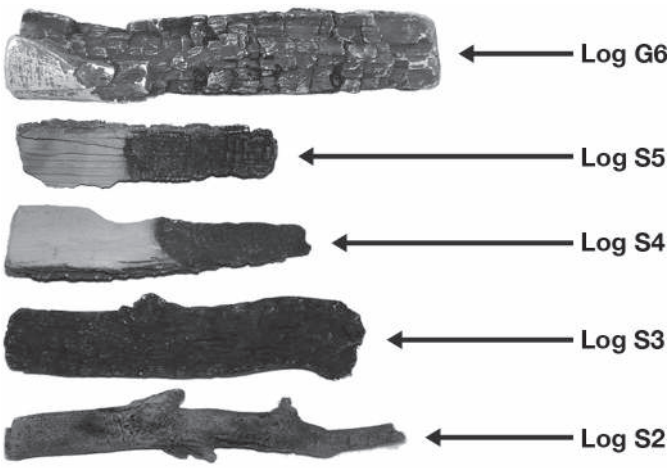


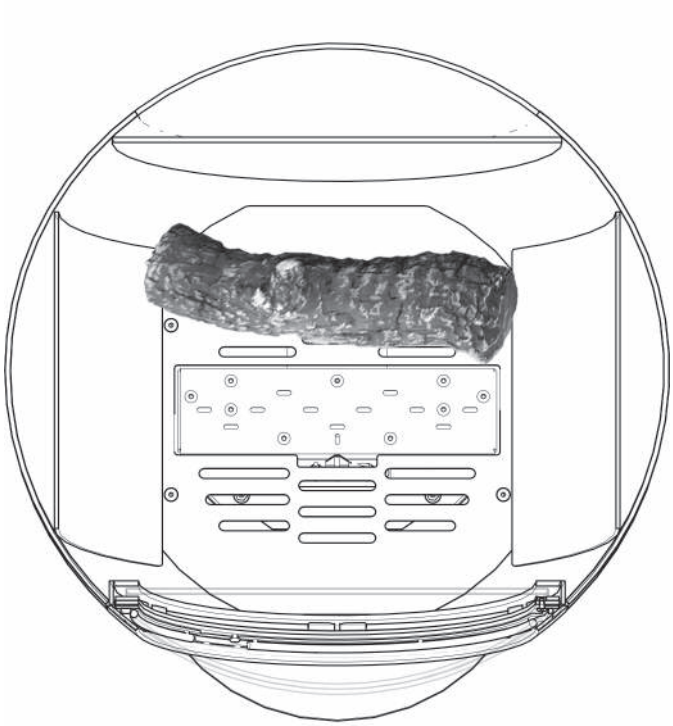

Position Log S3 as shown in the diagram.

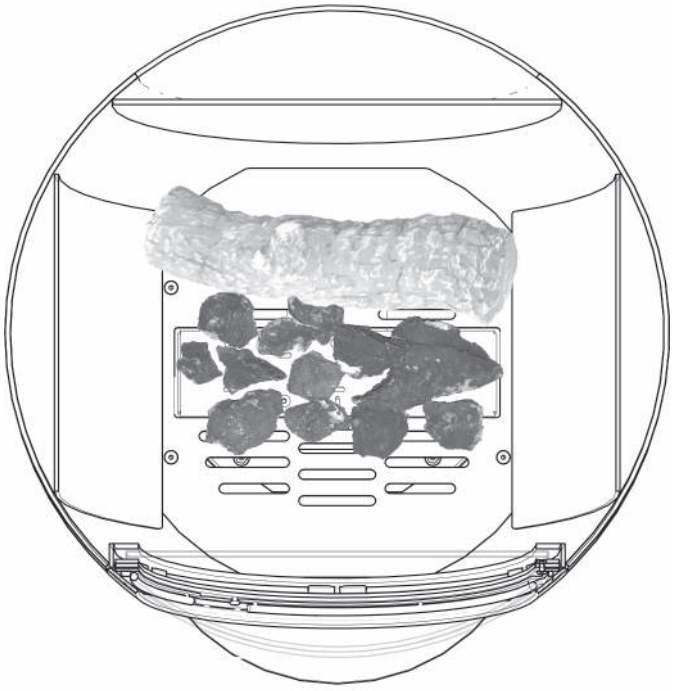

Scatter the Bags of Embers over the top of the burner as shown, keeping the pilot area clear.

# Installation instructions



Position Log S5 as shown in the diagram.

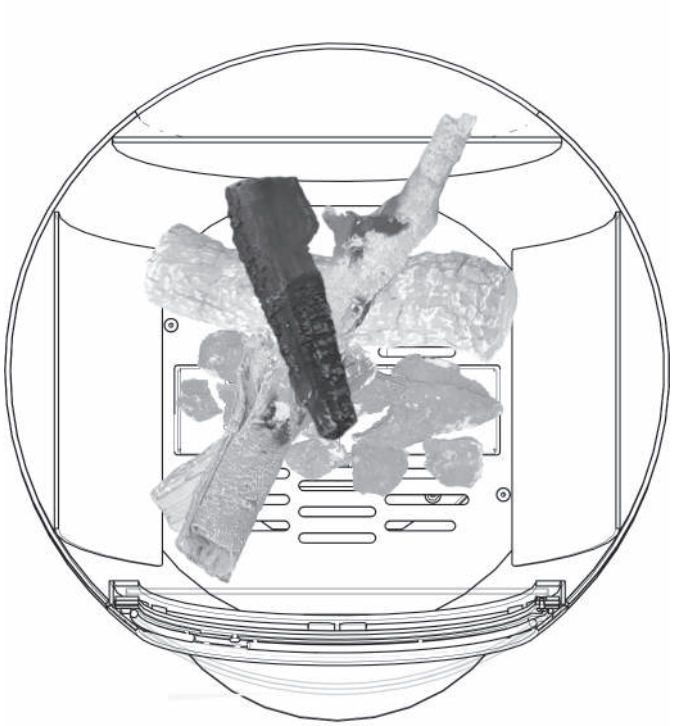

Position Log S4 as shown in the diagram.



Position Log S2 as shown in the diagram.

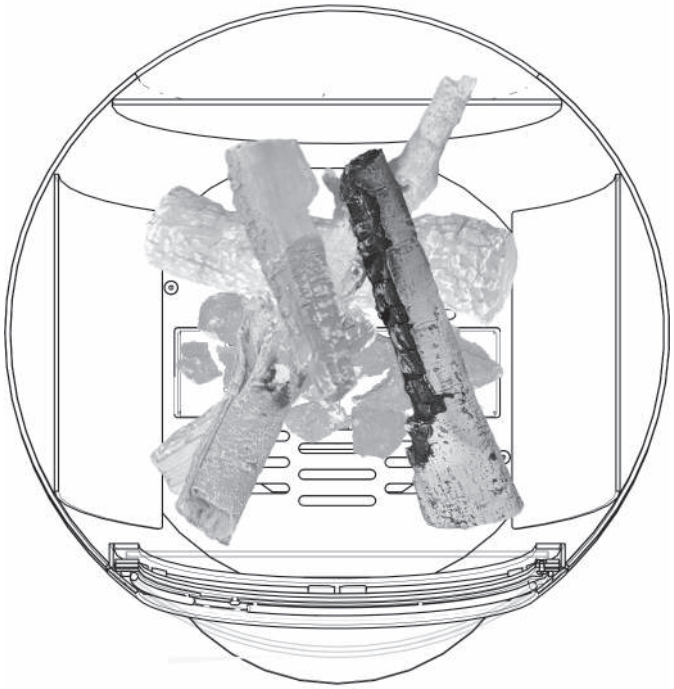

Position Log G6 as shown in the diagram.
Scatter the Glow Strands among the Logs and Embers. Finaly Check the appliance for Pilot ignition and cross lighting ensuring that no material is impinginging the opertion of the Pilot.

# Installation instructions

## C. LOG LAY LPG

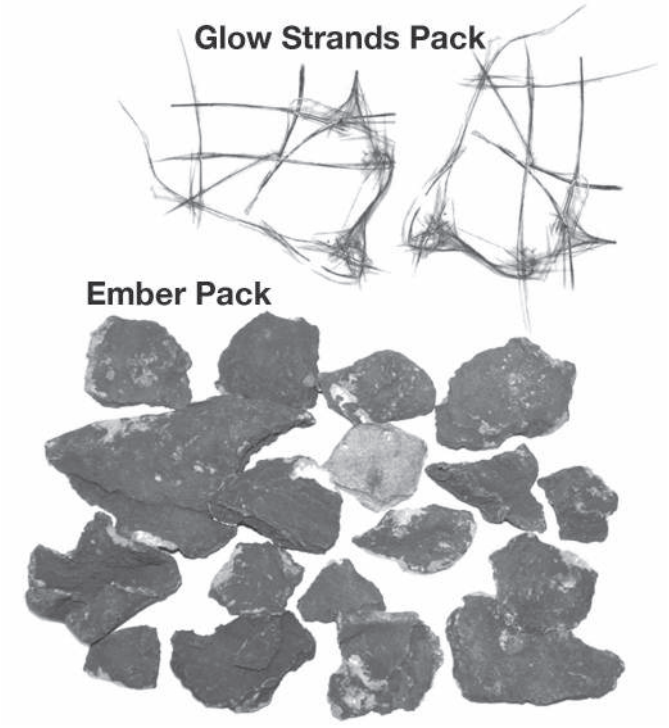


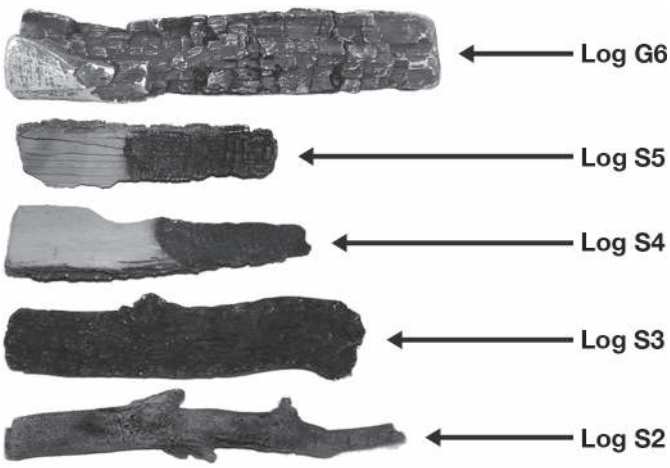




Position Log S3 as shown in the diagram.



Scatter the Bags of Embers over the top of the burner as shown, keeping the pilot area clear.

# Installation instructions



Position Log S5 as shown in the diagram.



Position Log S2 as shown in the diagram.



Position Log S4 as shown in the diagram.



Position Log G6 as shown in the diagram.
Scatter the Glow Strands among the Logs and Embers. Finaly Check the appliance for Pilot ignition and cross lighting ensuring that no material is impinginging the opertion of the Pilot.

## COMMISSIONING THE APPLIANCE

### A. PILOT IGNITION CHECK

1. Ignite the pilot light as described in the User Instructions
2. Check that the pilot flame stays alight
3. Extinguish the pilot light

### B. MAIN BURNER CHECK

1. Ignite the pilot light as described in the User Instructions
2. Turn on the main burner as described in the User Instructions
3. Check that the pilot smoothly cross-lights to the main burner and that the main burner and pilot stay alight
4. Check the operation of the «effect» burners as described in the User Instructions
5. Extinguish the appliance fully

### C. PRESSURE CHECK

The appliance is preset to give the correct heat inputs as listed in the technical details. No further adjustment is necessary. Always check the inlet pressure and burner pressure.

1. Turn off the gas valve on the appliance
2. Release the screw on the Inlet Pressure test point on the gas valve and connect a manometer
3. Check that the measured pressure is as the prescribed supply pressure
4. Perform the test when the appliance is burning on full (inc. «effect» burners) and with only the pilot alight
5. If the pressure is low, check the gas supply pipes are too a correct sizing
6. If the pressure is too high (more than 5 mbar over) the appliance may be installed, but the gas supply company should be contacted
7. Release the screw on the Burner Pressure test point on the gas valve and connect a manometer
8. Check that the measured pressure is as detailed in the Technical details
9. The measured value should be within +/- 10% of the described value. If this is not the case, please contact the supplier.

**NOTE:** After checking the pressures and removing the manometers, the screws in the Pressure Test points must be closed, and the system must be checked for gas-tightness.

# Servicing

Turn the appliance OFF and isolate the gas supply. Ensure the appliance is fully cold before attempting to start servicing the appliance. No liability can be accepted by Focus for injury caused by burning or scolding by a hot appliance.

A suggested procedure for servicing is listed below.

A. Lay out dust sheet on flooring, mask off any special fireplace materials.
B. Remove the porthole.
C. Remove the airtight glass.
D. Carefully remove the Ceramic components (including Embers) or Gravels
E. Use a Vacuum cleaner to clean the top of the burners and grate
F. Remove Grate
G. Use the vacuum cleaner and a soft brush to clean the pilot assembly and both Injectors. It may be easier to access the Injector by removing the Throttle. Never modify or bend the Thermocouple.
H. Clean the Window Panel.
I. Turn on the gas supply and check for leaks, check the burners and Pilot for good condition and operation
J. Replace Grate
K. Replace the Firebed arrangements
L. Replace the glasses.
M. Check the flue system and terminal, making sure that the terminal vent is fully clear
N. Light the appliance and test setting pressures
O. Check the safe operation of the appliance.

## CLEANING THE CERAMICS

Remove the ceramics as detailed in A - E above.

Gently clean the ceramics in the open air, using a soft brush and a vacuum cleaner. Where necessary replace damaged components only with genuine Focus specified parts. Seal any scrap ceramics in plastic bags and dispose at proper refuse sites. When using a vacuum cleaner, it is recommended that one with a HEPA filtering system is used.

Re-fit the Firebed arrangement, re-seal the appliance and check the safe operation of the appliance.

## SERVICING THE BURNER

A fault finding chart is included in the appendix for the Mertik control system fitted to this appliance.

Access the Burner as detailed in A - F above.

The pilot is now clearly visible, the pilot, including the Thermocouple, can be replaced/serviced by removing raising the pilot assembly from its mounting. This is done by removing the two screws on the surface of the pilot. The fittings on the under-side of the pilot can be un-done using a 10mm spanner where appropriate.

The Main Burner Injectors can be accessed from the underside of the appliance. If the burner requires to be removed, this may be done by removing the 4 M6 fixings inside the firebox (10mm Spanner), the burner will lift out through the Firebox.

When replacing any parts use only original Focus specified parts.

## SPARE PARTS

| Item | Slimfocus |
|---|---|
| Window Panel | xxxxxxx |
| Ceramic Log Pack | xxxxxxx |
| Ember Pack | xxxxxxx |
| Gravel Pack | xxxxxxx |
| Pilot Assembly Natural | xxxxxxx |
| Pilot Assembly LPG | xxxxxxx |
| Electrode | xxxxxxx |
| Electrode Lead | xxxxxxx |
| Thermocouple | xxxxxxx |
| Injector Natural Front | xxxxxxx |
| Injector Natural Rear | N/A |
| Injector LPG Front | xxxxxxx |
| Injector LPG Rear | N/A |
| Complete Burner Assembly Natural | xxxxxxx |
| Complete Burner Assembly LPG | xxxxxxx |
| Burner Seal | xxxxxxx |
| Grate Assembly Standard | xxxxxxx |
| Grate Assembly Tear & Deform | xxxxxxx |
| Gas Valve Assembly Natural | xxxxxxx |
| Gas Valve Assembly LPG | xxxxxxx |
| Latching Solenoid | xxxxxxx |
| Receiver unit | xxxxxxx |
| Handset | xxxxxxx |
| Access Door Assembly | xxxxxxx |

# Technical Information

## COUNTRIES OF USE

| Country | Natural | LPG |
|---|---|---|
| AT -Austria | I2H, G20 at 20 mbar | I3P(50),G31 at 50 mbar; I3B/P(50),G30/G31 at 50 mbar |
| BE -Belgium | I2E+, G20/G25 at 20/25 mbar | I3+,G31/G31 at 28/37 mbar; I3P(37),G31 at 37 mbar; I3B/P(30),G30/G31 at 30 mbar |
| BG -Bulgaria | I2H, G20 at 20 mbar | I3B/P(30),G30/G31 at 30 mbar |
| CH - Switzerland | I2H, G20 at 20 mbar | I3P(50),G31 at 50 mbar; I3+,G31/G31 at 28/37 mbar; I3P(37),G31 at 37 mbar; I3B/P(50), G30/G31 at 50 |
| CY -Cyprus | I2H, G20 at 20 mbar | I3+,G31/G31 at 28/37 mbar; I3B/P(30),G30/G31 at 30 mbar |
| CZ -Czech Republic | I2H, G20 at 20 mbar | I3P(50),G31 at 50 mbar; I3+,G31/G31 at 28/37 mbar; I3P(37),G31 at 37 mbar; 3B/P(50), G30/G31 at 50 |
| DE -Germany | I2ELL, G25 at 20 mbar[1]; I2E, G20 at 20 mbar | I3P(50),G31 at 50 mbar; I3B/P(50),G30/G31 at 50 |
| DK -Denmark | I2H, G20 at 20 mbar | I3B/P(30),G30/G31 at 30 mbar |
| EE -Estonia | I2H, G20 at 20 mbar | I3B/P(30),G30/G31 at 30 mbar |
| ES -Spain | I2H, G20 at 20 mbar | I3+,G31/G31 at 28/37 mbar; I3P(37),G31 at 37 mbar |
| FI -Finland | I2H, G20 at 20 mbar | I3P(30),G31 at 30 mbar; I3B/P(30),G30/G31 at 30 mbar |
| FR -France | I2E+, G20/G25 at 20/25 mbar | I3+,G31/G31 at 28/37 mbar; I3P(37),G31 at 37 mbar; I3B/P(30),G30/G31 at 30 mbar; I3B/P(50),G30/G31 at 50 |
| GB -United Kingdom | I2H, G20 at 20 mbar | I3+,G31/G31 at 28/37 mbar; I3P(37),G31 at 37 mbar; I3B/P(30),G30/G31 at 30 mbar |
| GR -Greece | I2H, G20 at 20 mbar | I3+,G31/G31 at 28/37 mbar; I3P(37),G31 at 37 mbar; I3B/P(30),G30/G31 at 30 mbar |
| HU -Hungary | | I3B/P(30),G30/G31 at 30 mbar |
| HR -Croatia | I2H, G20 at 20 mbar | I3P(37),G31 at 37 mbar; I3B/P(30),G30/G31 at 30 mbar |
| IE -Ireland | I2H, G20 at 20 mbar | I3+,G31/G31 at 28/37 mbar; I3P(37),G31 at 37 mbar |
| IS -Iceland | | |
| IT -Italy | I2H, G20 at 20 mbar | I3+,G31/G31 at 28/37 mbar; I3P(37),G31 at 37 mbar; I3B/P(30),G30/G31 at 30 mbar |
| LT -Lithuania | I2H, G20 at 20 mbar | I3+,G31/G31 at 28/37 mbar; I3P(37),G31 at 37 mbar; I3B/P(30),G30/G31 at 30 mbar |
| LU -Luxembourg | I2E, G20 at 20 mbar | |
| LV -Latvia | I2H, G20 at 20 mbar | |
| MT -Malta | | I3B/P(30),G30/G31 at 30 mbar |
| NL -The Netherlands | I2L, I2EK, G25/G25.3 at 25 mbar I2(43.46-45.3 MJ/m3 (0°C)) | I3P(50),G31 at 50 mbar; I3P(30),G31 at 30 mbar; I3P(37),G31 at 37 mbar; I3B/P(30), G30/G31 at 30 mbar |
| NO -Norway | I2H, G20 at 20 mbar | I3B/P(30),G30/G31 at 30 mbar |
| PL -Poland | I2E, G20 at 20 mbar | I3P(37),G31 at 37 mbar |
| PT -Portugal | I2H, G20 at 20 mbar | I3+,G31/G31 at 28/37 mbar; I3P(37),G31 at 37 mbar |
| RO -Romania | I2E, G20 at 20 mbar | I3P(30),G31 at 30 mbar; I3B/P(30),G30/G31 at 30 mbar |
| SE - Sweden | I2H, G20 at 20 mbar | I3B/P(30),G30/G31 at 30 mbar |
| SL -Slovenia | I2H, G20 at 20 mbar | I3+,G31/G31 at 28/37 mbar; I3P(37),G31 at 37 mbar; I3B/P(30),G30/G31 at 30 mbar |
| SK -Slovakia | I2H, G20 at 20 mbar | I3P(50),G31 at 50 mbar; I3+,G31/G31 at 28/37 mbar; I3P(37),G31 at 37 mbar; I3B/P(30),G30/G31 at 30 mbar; I3B/P(50),G30/G31 at 50 |
| TR -Turkey | I2H, G20 at 20 mbar | I3+,G31/G31 at 28/37 mbar; I3P(37),G31 at 37 mbar; I3B/P(30),G30/G31 at 30 mbar |

# Technical Information

## ■ TECHNICAL DATA

Product Identification Number : 0359CQ0657

| Boafocus Natural | | | | | |
|---|---|---|---|---|---|
| Gas type | | G20<br>I2H,I2E | G20/G25<br>I2E+ | G20/G25<br>I2ELL | G25/G25.3<br>I2(43.46 -45.3 MJ/m3 (0°C))<br>I2L/ I2EK |
| Supply Pressure | mbar | 20 | 20/25 | 20 | 25 |
| Nominal Heat Input Gross (Hs) | kW | 7 | 7 | 7 / 6 | 7 |
| Nominal Heat Input Nett (Hi) | kW | 6.3 | 6.3 | 6.3 / 5.5 | 6.3 |
| Consumption | m³/hr | 0.673 | 0.673/0.723 | 0.673/0.644 | 0.723 |
| Burner Pressure (hot) | mbar | 19.7 | 19.7/24.5 | 19.7 | 24.5 |
| Injector Marking | | 480 | | | |
| Pilot | | 446.1385.44 | | | |
| Efficiency Class | | 2 | | | |
| Nox Class | | 5 | | | |

| Boafocus LPG | | | | | |
|---|---|---|---|---|---|
| Gas type | | G30/G31 | | G31 | |
| | | I3B/P(30/50) | I3+ | I3P(37,50) | I3P(30) |
| Supply Pressure | mbar | 30/50 | 28-30/37 | 37/50 | 30 |
| Nominal Heat Input Gross (Hs) | kW | 4.1 | 4.1 | 4.1 | 3.6 |
| Nominal Heat Input Nett (Hi) | kW | 3.8 | 3.8 | 3.8 | 3.3 |
| Consumption | m³/hr | 0.116 | 0.116 | 0.144 | 0.131 |
| Burner Pressure (hot) | mbar | 28.9 | 28.9 | 36.8 | 29.9 |
| Injector Marking | | 120 | | | |
| Pilot | | 446.1385.24 | | | |
| Efficiency Class | | 2 | | | |
| Nox Class | | 5 | | | |

# Technical Information

## ■ DIMENSIONS

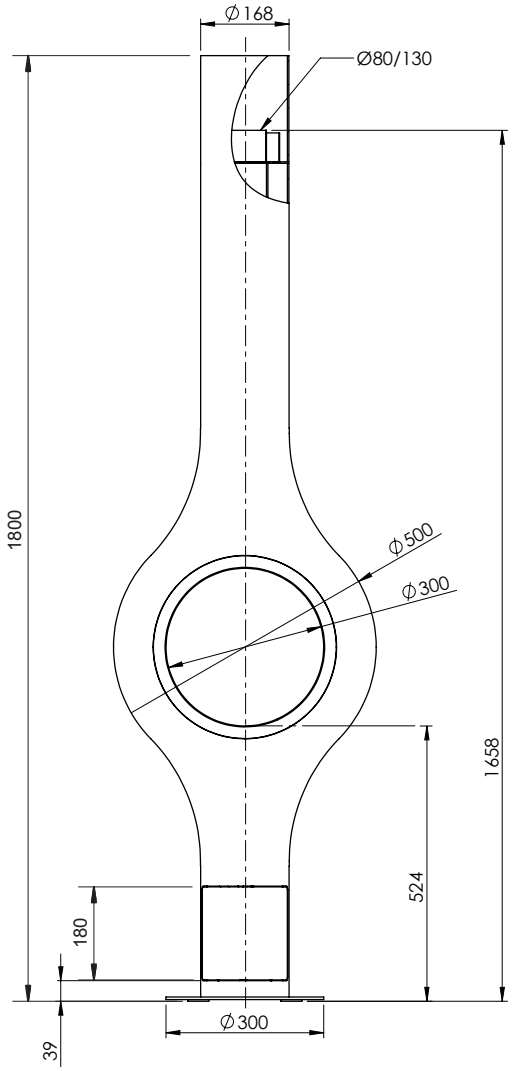


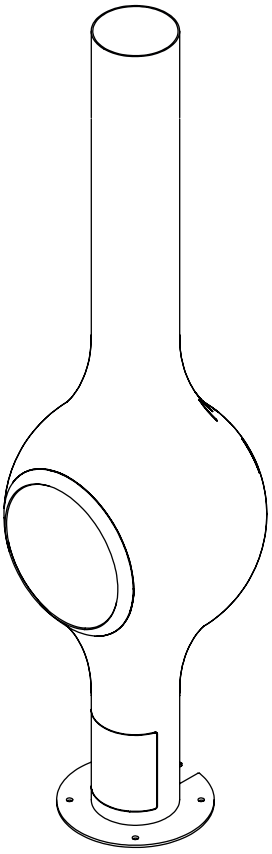

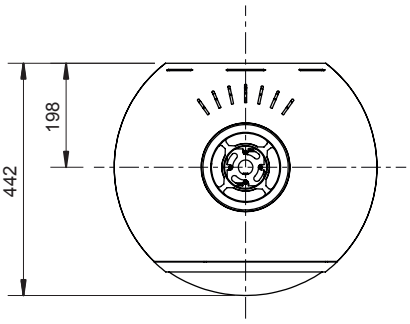

# Appendix

## ■ MERTIK FAULT FINDING CHART

| | FUNCTION | | POSSIBLE CAUSE | | REMEDY |
|---|---|---|---|---|---|
| 1 | HANDSET START:<br><br>Press both buttons to start ignition (IGN) sequence. Beep will occur each second. | No → | Transmitter batteries low. | | Replace transmitter batteries.<br>9V quality alkaline recommended. |
| | | | Receiver batteries low. | | Replace receiver batteries with 1.5V “AA” quality alkaline batteries. |
| | | | Optional mains adapter not operating properly. | | Check mains adapter. |
| | | | Check coding of transmitter and receiver. (Initial sync.) | | Learn new code (reset).<br>See label on receiver. |
| | | | Transmitter distance limited. | | 1. Straighten the antenna.<br>2. Replace receiver.<br>See wiring diagram, p. 24. |
| | OK ↓ | | | | |
| 2 | Magnet unit is energized (audible thud to detect functionality). | No → | No beep | → Impulse magnet not operating properly. | Replace gas valve. |
| | | No → | 3 short beeps | → Low batteries. | Replace receiver batteries with 1.5V “AA” quality alkaline batteries. |
| | | No → | 1 long beep | → ON/OFF switch in OFF position. | Switch to ON. |
| | | | | 8-wire cable Off/not operating properly. | Check 8-wire cable. |
| | | | | SW-cable disconnected. | Check cable connection.<br>See figure 1 on page 24. |
| | | | | Motor not operating properly. | Replace gas valve. |
| | | | | Micro switch not operating properly. | Replace gas valve. |
| | OK ↓ | | | | |

# Appendix

| | FUNCTION | | POSSIBLE CAUSE | REMEDY |
|---|---|---|---|---|
| 3 | Spark will occur each second. | No → | Ignition components not operating properly. | Check connection between cable & IGNelectrode. See wiring diagram, p. 24. |
| | | | | Check IGN-electrode spark gap. See wiring diagram, p. 24. |
| | | | | Check IGN-electrode. See wiring diagram, p. 24. |
| | | | | Check IGN-cable for damage. See wiring diagram, p. 24. |
| | | | | Increase distance between IGN-cable and all metal parts. Shorten IGN-cable if possible or cover, e.g. silicon hose. See wiring diagram, p. 24. |
| | | No → | IGN-sequence stops, no pilot flame. No reaction to transmitter command. (Controller crashes.) | Press RESET button. See “Setting the Electronics Code” p. 24. |
| | | | | Add ground wire between pilot burner and valve. See wiring diagram, p. 24. |
| | | | | Do not coil the IGN-cable. |
| | | | | Shorten IGN-cable if possible (no longer than 900 mm). See wiring diagram, p. 24. |
| | | No → | IGN-sequence stops, no pilot flame. Transmitter command is possible. | Replace receiver batteries with 1.5V “AA” quality alkaline batteries. |

OK



# Appendix

| | FUNCTION | | POSSIBLE CAUSE | REMEDY |
|---|---|---|---|---|
| 4 | Pilot lit. | No → | TC- and SW-cable reversed. | Check connection of cable to receiver and interrupter. See figure 1. |
| | OK | | Magnet unit not operating properly. | Replace gas valve or (magnet unit). |
| | | | Short between interrupter and SW-cable. | Check connection to interrupter. |
| | | | No gas (magnet unit drops after 30 second audible count). | Check gas supply. |
| | | | 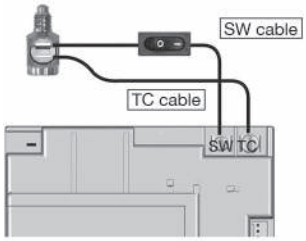 Figure 1 | |
| 5 | Sparking stops after pilot is lit. | No → | Short between interrupter and TC-cable. | Check connection to interrupter. See figure 1. |
| | OK | | Electronic measuring amplifier defective. | Replace Receiver. See wiring diagram, p. 24. |
| 6 | Motor turns to main gas and pilot stays lit. | No → | Resistance in thermo current circuit too high. | Check cable in thermo-current circuit. See wiring diagram, p. 24. |
| | | Magnet unit drops (audible sound). | Not enough heat on thermocouple. | Check position of pilot to thermocouple and intensity of pilot flame. |
| | | | Low voltage from thermocouple. | Replace thermocouple Do not overtighten (hand tight +1/4 turn max). |
| | | | Short because thermocouple end is damaged or not centered. | Replace thermocouple. Do not overtighten (hand tight +1/4 turn max). |
| | | No → | IGN-sequence stops. No reaction to transmitter command (Controller crashes). | Press RESET button. See “Setting the Electronics Code” p. 3. |
| | OK | | | Add ground wire between pilot burner and valve. See wiring diagram, p. 24. |
| | | | | Do not coil the IGN-cable. |
| | | | | Shorten IGN-cable if possible (no longer than 900 mm). See wiring diagram, p. 24. |

# Appendix

| | FUNCTION | | POSSIBLE CAUSE | REMEDY |
|---|---|---|---|---|
| 7 | Main burner is lit. | No → | Manual knob in “MAN” position. | Turn manual knob to “ON” position (positive latch is required). See “Manual Operation” p. 08. |
| | OK ↓ | | | |
| 8 | Main burner stays lit. | No → | Too much draft at pilot (poor flame impingement of thermo-couple). | Check installation. |
| | OK ↓ | | | |
| 9 | Magnet unit drops while motor turns. 3 beeps. | No → | Low batteries. | Replace receiver batteries with 1.5V “AA” quality alkaline batteries. |

| | | | | | |
|---|---|---|---|---|---|
| System can be switched OFF via the electronics. | No → | System CAN be switched OFF via ON/OFF switch. | No → | Short in interrupter between TC- and SW- cable. | Check connection to interrupter block. See wiring diagram, p. 24. |
| YES ↓ OK | | YES ↓ OK → | | Replace gas valve (magnet unit [CE only]). | |

# Appendix

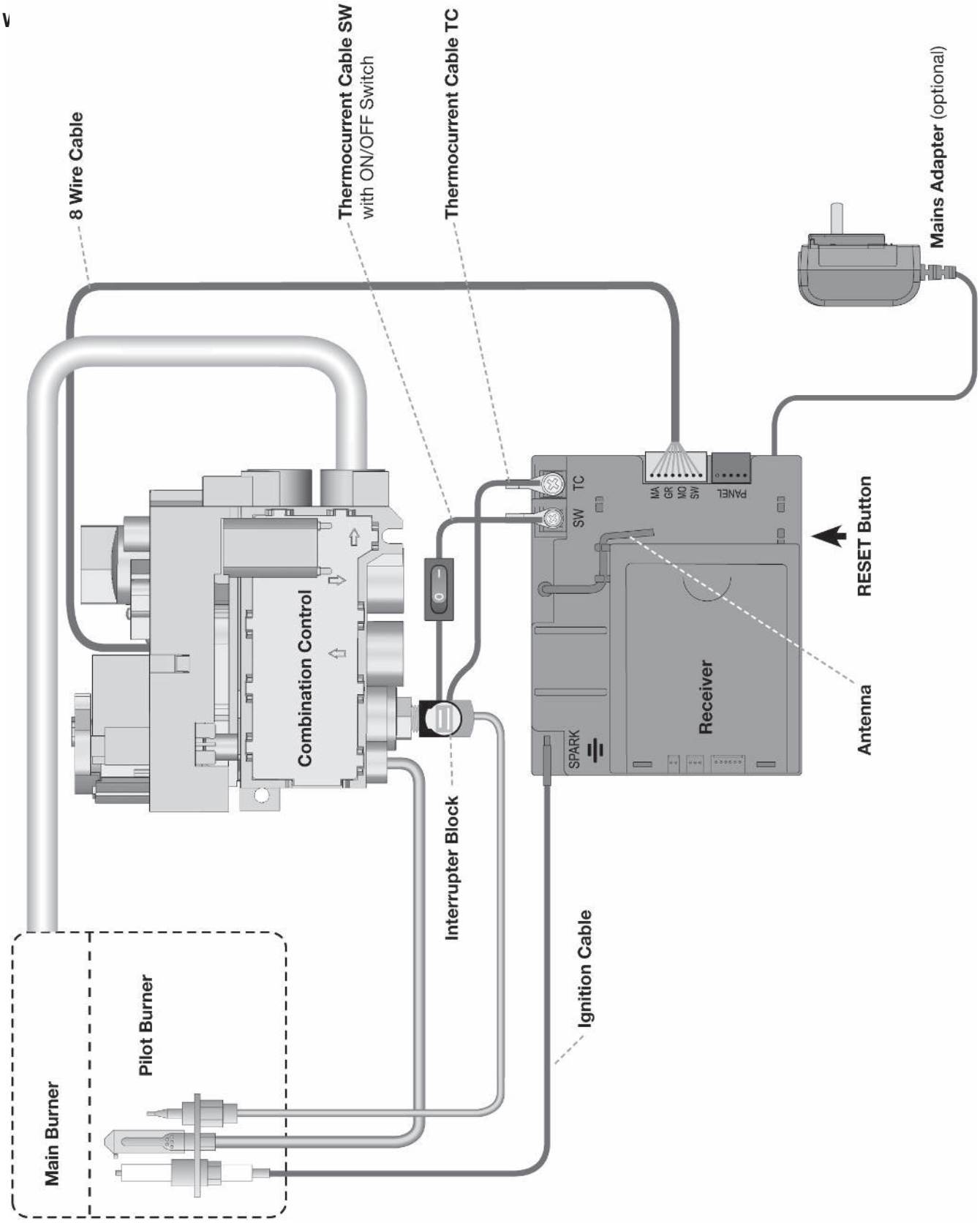
8 Wire Cable
Thermocurrent Cable SW
with ON/OFF Switch
Thermocurrent Cable TC
Mains Adapter (optional)
Combination Control
Receiver
RESET Button
Antenna
Interrupter Block
Ignition Cable
Main Burner
Pilot Burner
SW TC
SPARK
PANEL

# Appendix

## DECLARATION OF CONFORMITY

**ATELIER DOMINIQUE IMBERT s.a.s.**
**3 Impasse Claque Patin**
**F - 34380 Viols le Fort**

declares that the FOCUS independent gas fired convection heaters described here are in accordance with the appliances described in the EC-Type Examination Certificate No. UK-LHD-0359-0657R4 delivered by INTERTEK and comply with the essential requirements applicable to EN 613 :2001 + A1 :2008 and Regulation UE 2016/426.

Signed for and behalf of the manufacturer by :

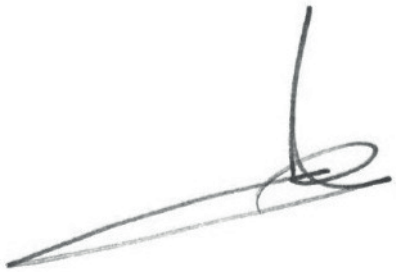

Laurent Gaborit
Directeur Général

Viols le Fort, 06th June 2018

focus®
cheminées contemporaines

Création - Édition - Distribution :
Atelier dominique imbert

S.A.S. au capital de 102 355 euros
34380 Viols-le-Fort
France

Tel. : 00 33 (0)4 67 55 01 93
Fax. : 00 33 (0)4 67 55 77 77
Web : www.focus-creation.com
Email : info@focus-creation.com

V. 04 - May 2019