UKA 35/80/35/50S

Technical data
Version 2021/09

	operation when directly connected to chimney	operation when connected accumulation mass	
Energy label	A+	A+	A+
Operating data			
Nominal heat power	7 kW	----	----
Efficiency	> 80 %	----	----
Consumption of wood	2 kg/h	4 kg	3,5 kg
Total heat output of the burning chamber	----	15 kW	13 kW
Mass flow of flue gas	5,7 g/s	13 g/s	12 g/s
Required chimney pressure	12 Pa	12 Pa	15 Pa
Required amount of combustion air	20 m^3/h	35 m^3/h	30 m^3/h
Average flue gas temperature			
on the output	228 °C	355 °C	340 °C
past 2,4 m of ceramic accumulation system KMS 300 [1]	----	215 °C	----
past S-accumulation rings (5x S-acc. ring Ø345mm)	----	----	220 °C
Heat distribution			
fireplace insert	50 %	35 %	35 %
door glass (single / double)	50 / - %	50 / - %	50 / - %
adjoining accumulation mass	----	15 %	15 %
Information for ventilated builds			
Minimal grill area supply / outgoing	700 / 800 cm^2	700 / 800 cm^2	700 / 800 cm^2
Minimum distance from insulated areas / floor	50 / 0 mm	50 / 0 mm	
Reference insulation [2] ceiling / back wall / side wall / floor	120 / 70 / 0 / 0 mm	120 / 70 / 0 / 0 mm	
Calciumsilicate insulation [3] ceiling / back wall / side wall / floor	80 / 50 / 0 / 0 mm	80 / 50 / 0 / 0 mm	
Information for non-ventilated builds (closed grills)			
Minimum radiant area [4]	4 m^2	4 m^2	
Minimum distance from insulated areas / floor	50 / 20 mm	50 / 20 mm	
Reference insulation [2] ceiling / back wall / side wall / floor	160 / 90 / 0 / 20 mm	160 / 90 / 0 / 20 mm	
Calciumsilicate insulation [3] ceiling / back wall / side wall / floor	120 / 70 / 0 / 20 mm	120 / 70 / 0 / 20 mm	
General technical information			
Total weight / lining weight	ca. 185 / 55 kg	ca. 185 / 55 kg	
Burning chamber dimensions (width x depth)	590 x 205 mm		
Combustion air connection	Ø 125 mm		
Use in non-ventilated accumulation builds according to craft rules	suitable		
Tested according to	EN 13229		
Meets values	1. BImSchV (Stufe2), 15a BVG		

1 Listed value from testing. For accurate results is evaluation of each system in the Ortner / KOV program necessary.

2 Mineral wool according to AGI-Q 132

3 Example SkamoEnclousure Board 225 kg/m^3

4 Depends on accumulation period and material characteristics. Listed values calculated with chamotte stone thickness 30 mm with radiant area 500 W/m^2

HOXTER GmbH I Haidmühlweg 5 I 92665 Altenstadt an der Waldnaab I Germany I +49(0)9602 944 7944 I info@hoxter.de
HOXTER a.s. I Jinacovice 512 I 664 34 Jinacovice I Czech republic I +420 518 777 701 I info@hoxter.eu

UKA 35/80/35/50S

Technical data
Version 2021/09

air connection / feet

M 1:10

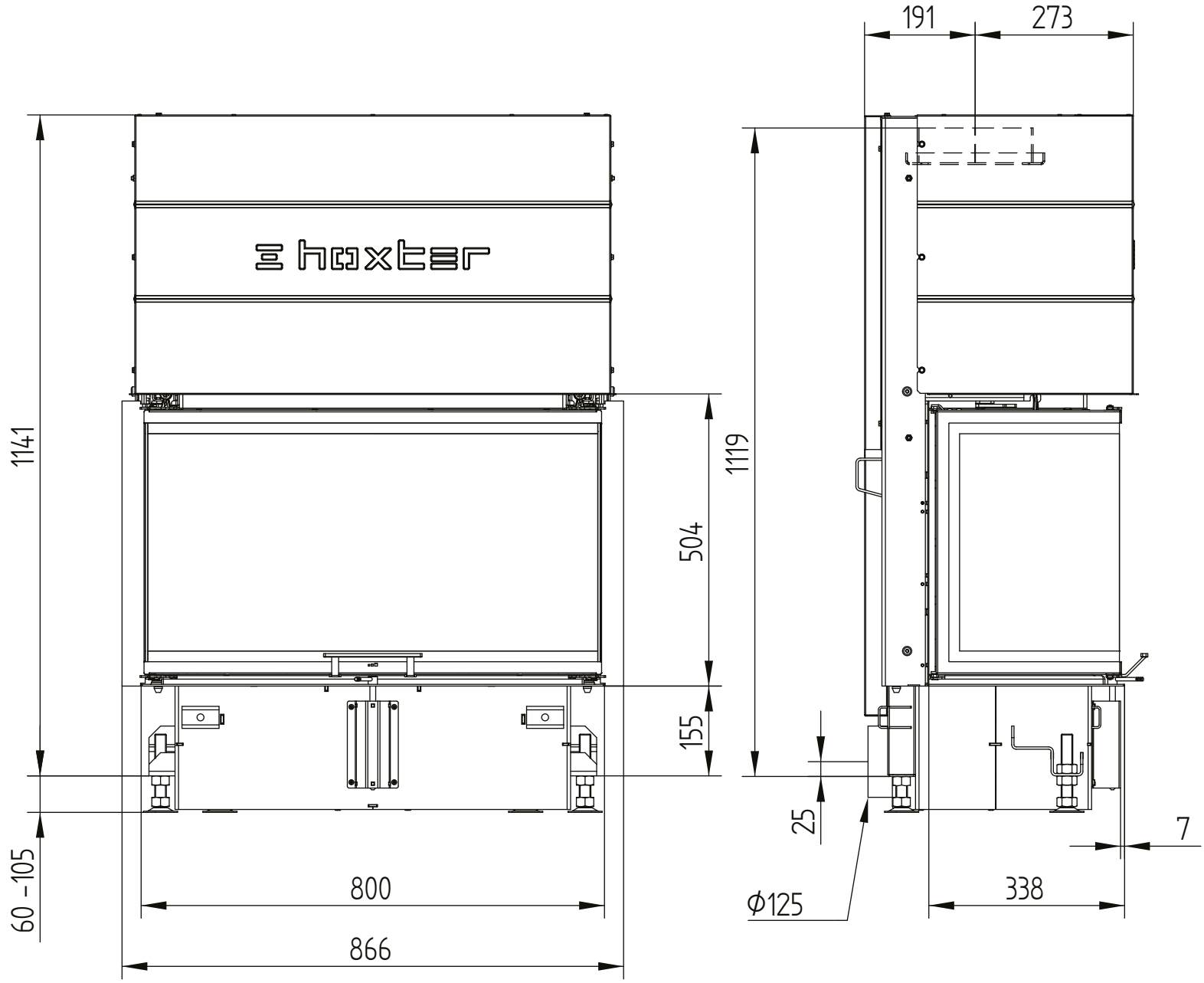

HOXTER GmbH I Haidmühlweg 5 I 92665 Altenstadt an der Waldnaab I Germany I +49(0)9602 944 7944 I info@hoxter.de
HOXTER a.s. I Jinacovice 512 I 664 34 Jinacovice I Czech republic I +420 518 777 701 I info@hoxter.eu

air connection / feet **M 1:10**

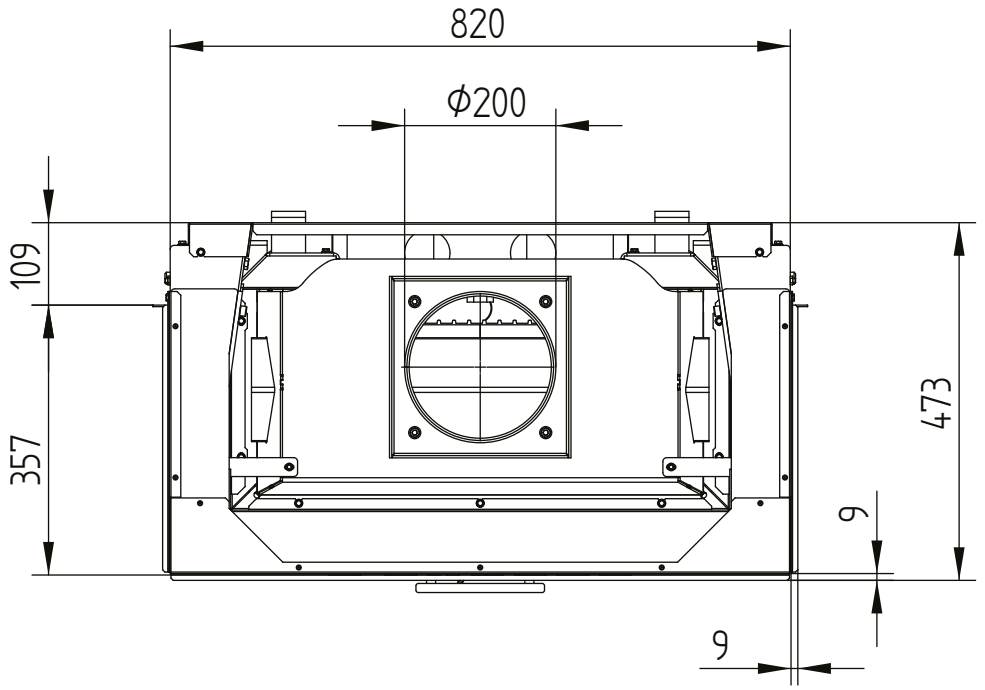

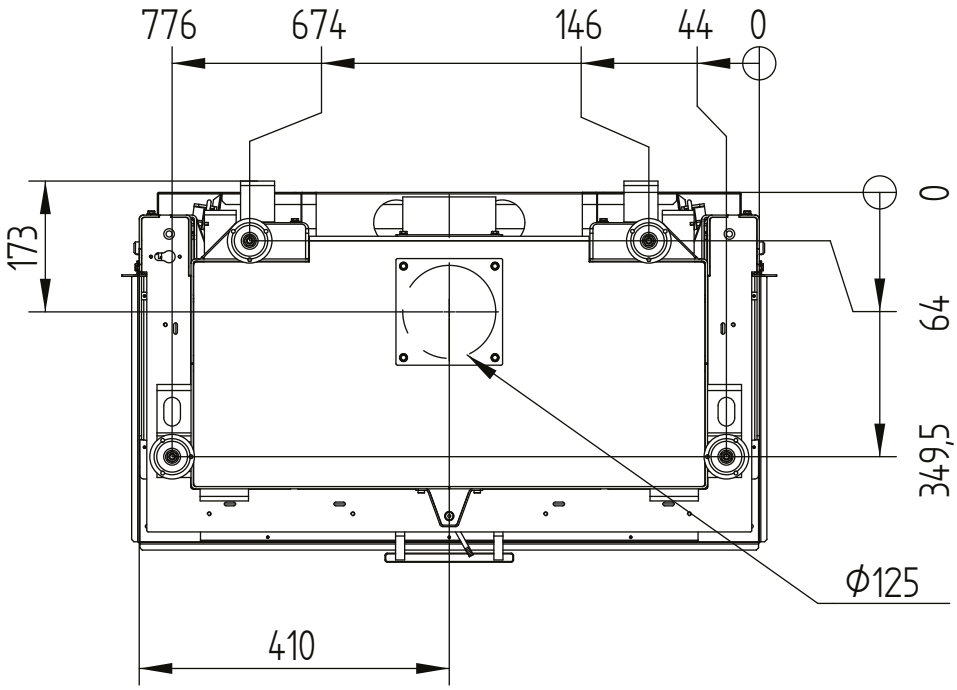

UKA 35/80/35/50S

S-accumulation rings

M 1:10

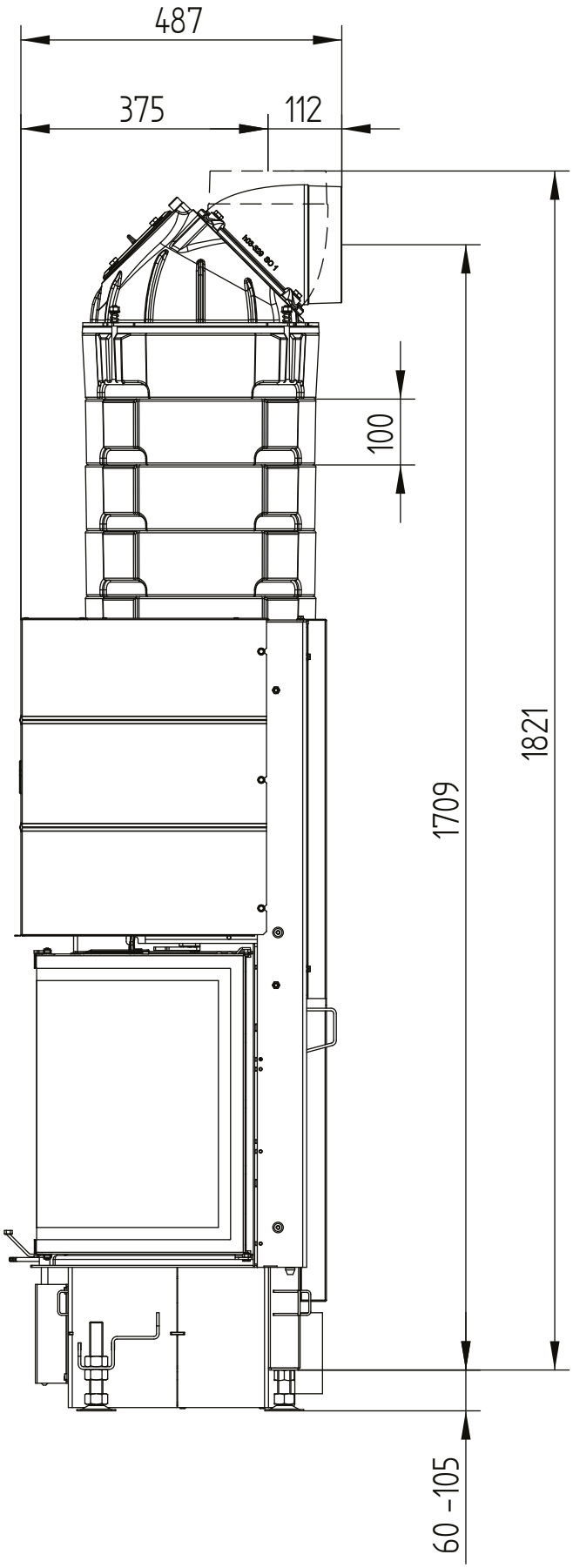

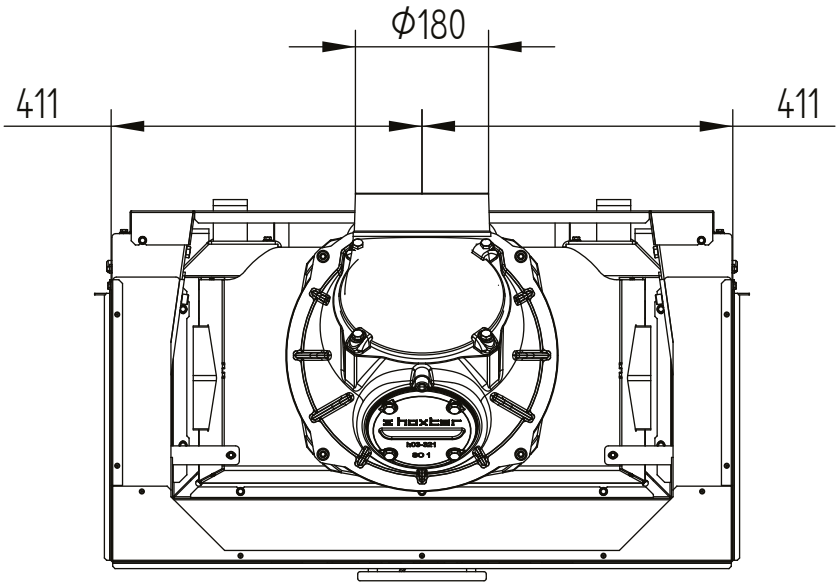

HOXTER GmbH I Haidmühlweg 5 I 92665 Altenstadt an der Waldnaab I Germany I +49(0)9602 944 7944 I info@hoxter.de
HOXTER a.s. I Jinacovice 512 I 664 34 Jinacovice I Czech republic I +420 518 777 701 I info@hoxter.eu

UKA 35/80/35/50S

Technical data
Version 2021/09

supporting construction incl. build-on frame 3sides 70 mm

M 1:10

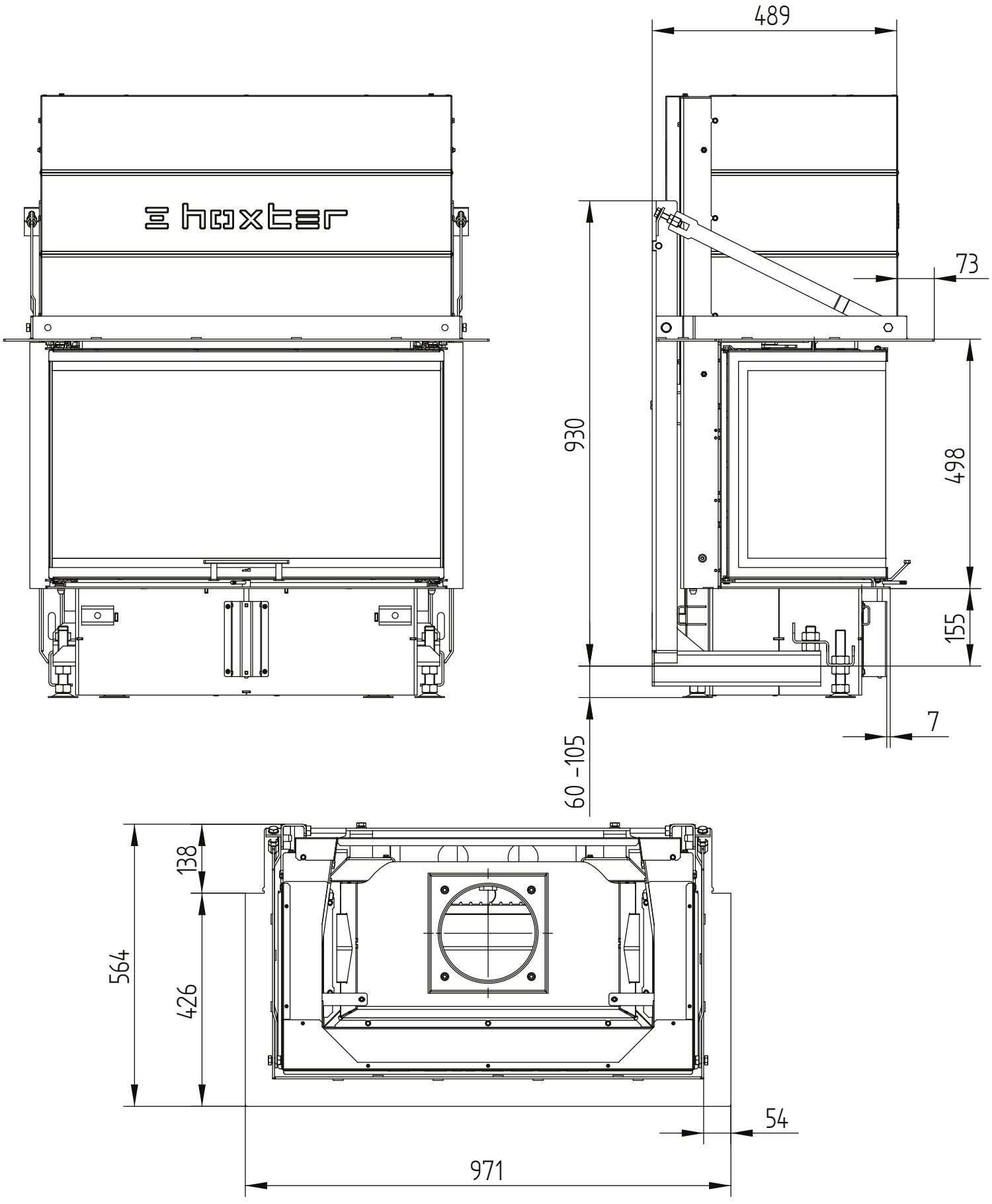

HOXTER GmbH I Haidmühlweg 5 I 92665 Altenstadt an der Waldnaab I Germany I +49(0)9602 944 7944 I info@hoxter.de
HOXTER a.s. I Jinacovice 512 I 664 34 Jinacovice I Czech republic I +420 518 777 701 I info@hoxter.eu

UKA 35/80/35/50S

Technical data
Version 2021/09

supporting construction incl. build-on frame 5sides 70 mm

M 1:10

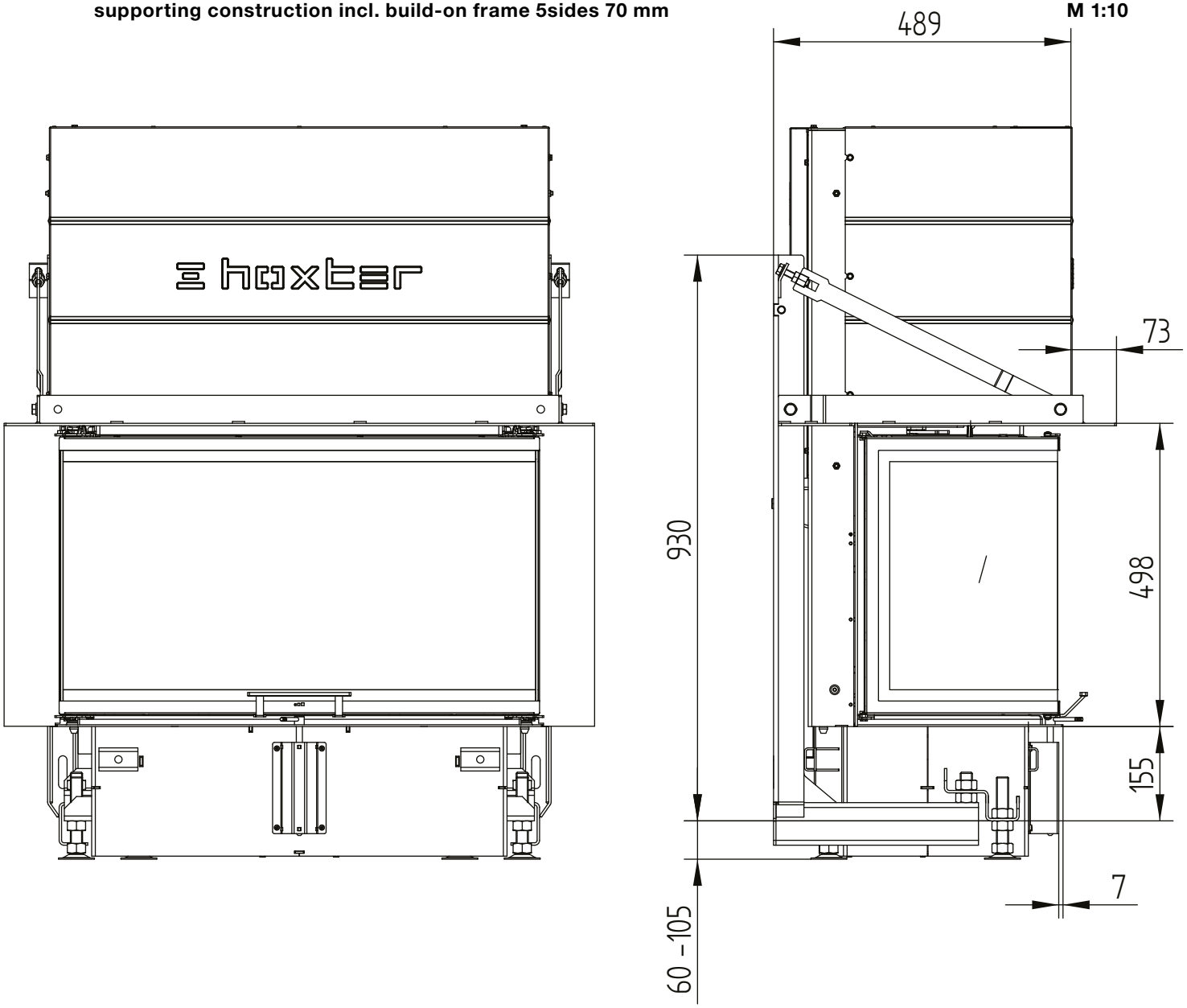

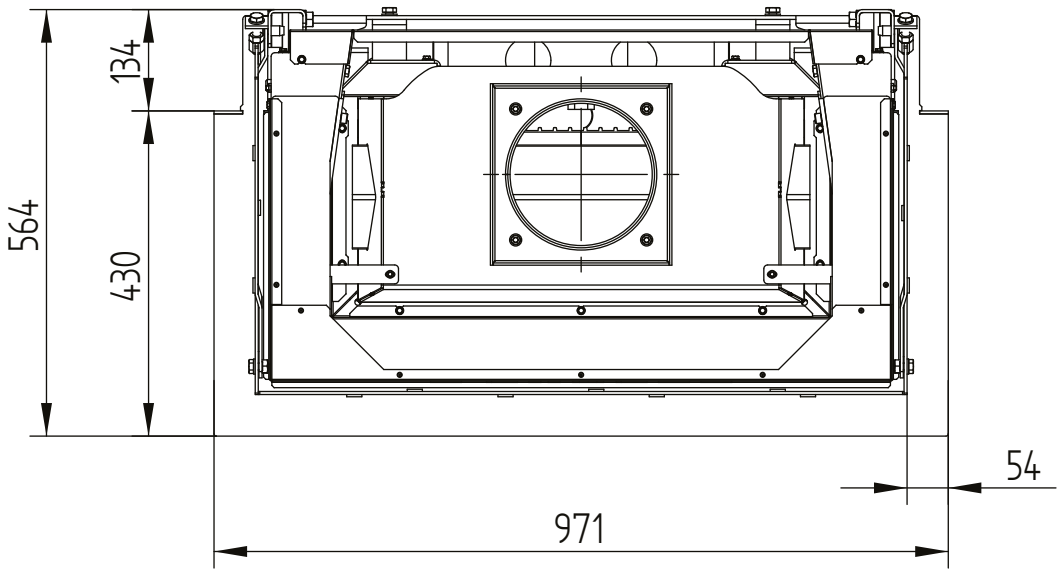

HOXTER GmbH I Haidmühlweg 5 I 92665 Altenstadt an der Waldnaab I Germany I +49(0)9602 944 7944 I info@hoxter.de
HOXTER a.s. I Jinacovice 512 I 664 34 Jinacovice I Czech republic I +420 518 777 701 I info@hoxter.eu

UKA 35/80/35/50S

Technical data
Version 2021/09

supporting construction incl. build-on frame 8sides 70 mm

M 1:10

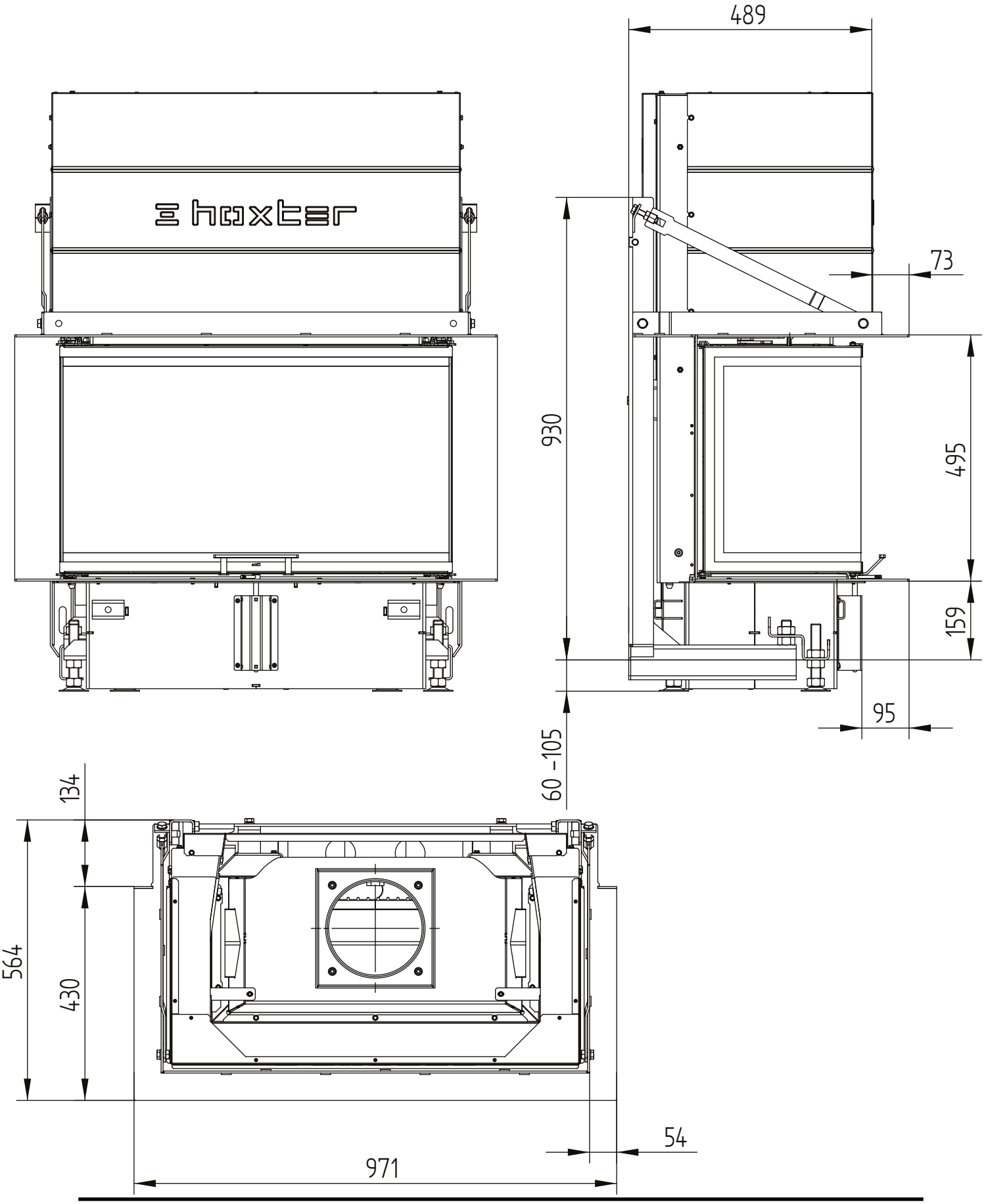

HOXTER GmbH I Haidmühlweg 5 I 92665 Altenstadt an der Waldnaab I Germany I +49(0)9602 944 7944 I info@hoxter.de
HOXTER a.s. I Jinacovice 512 I 664 34 Jinacovice I Czech republic I +420 518 777 701 I info@hoxter.eu