BRUNNER TILE STOVES



HKD 4.1

State: 20.07.2016



BRUNNER®

made in germany

Dimension sheet | **HKD 4.1**

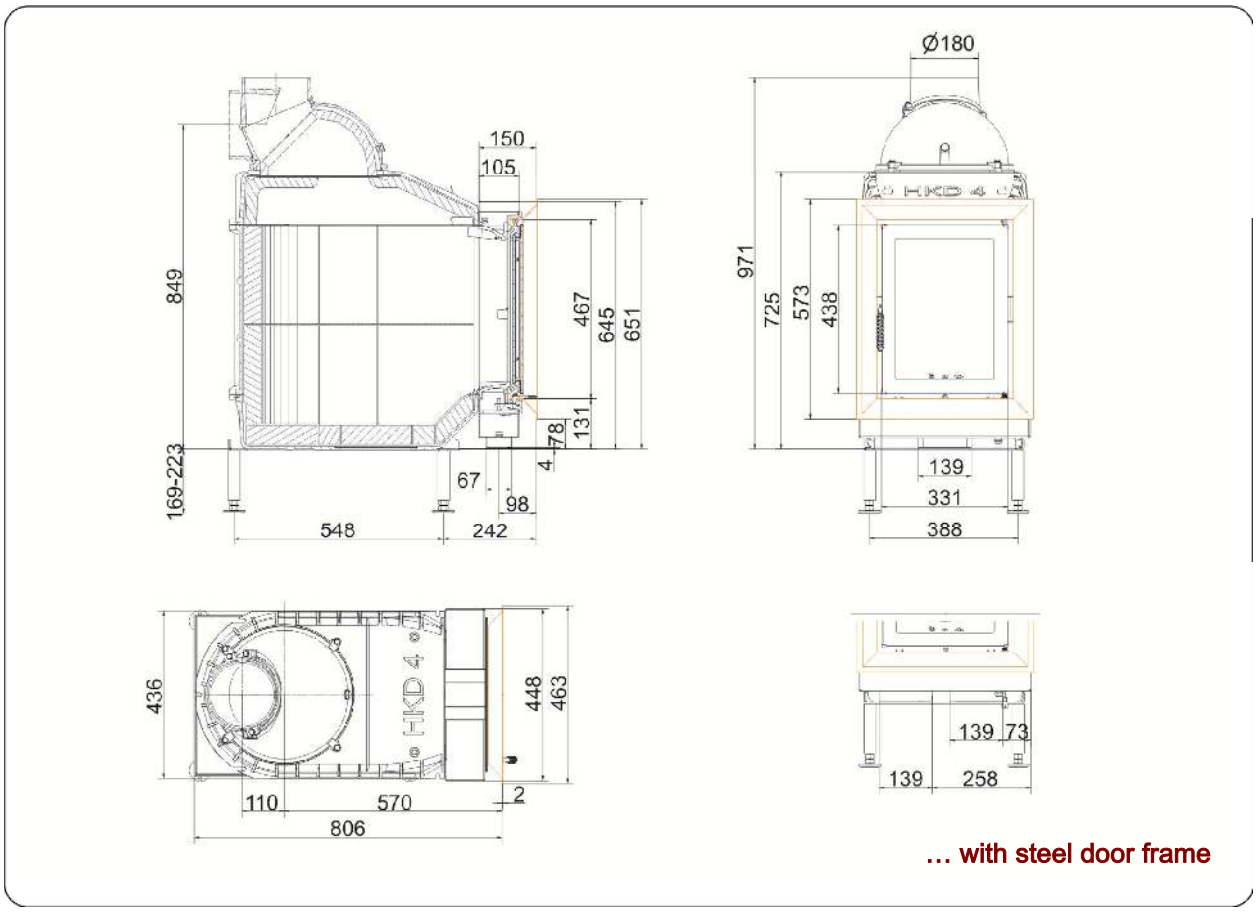

… with steel door frame

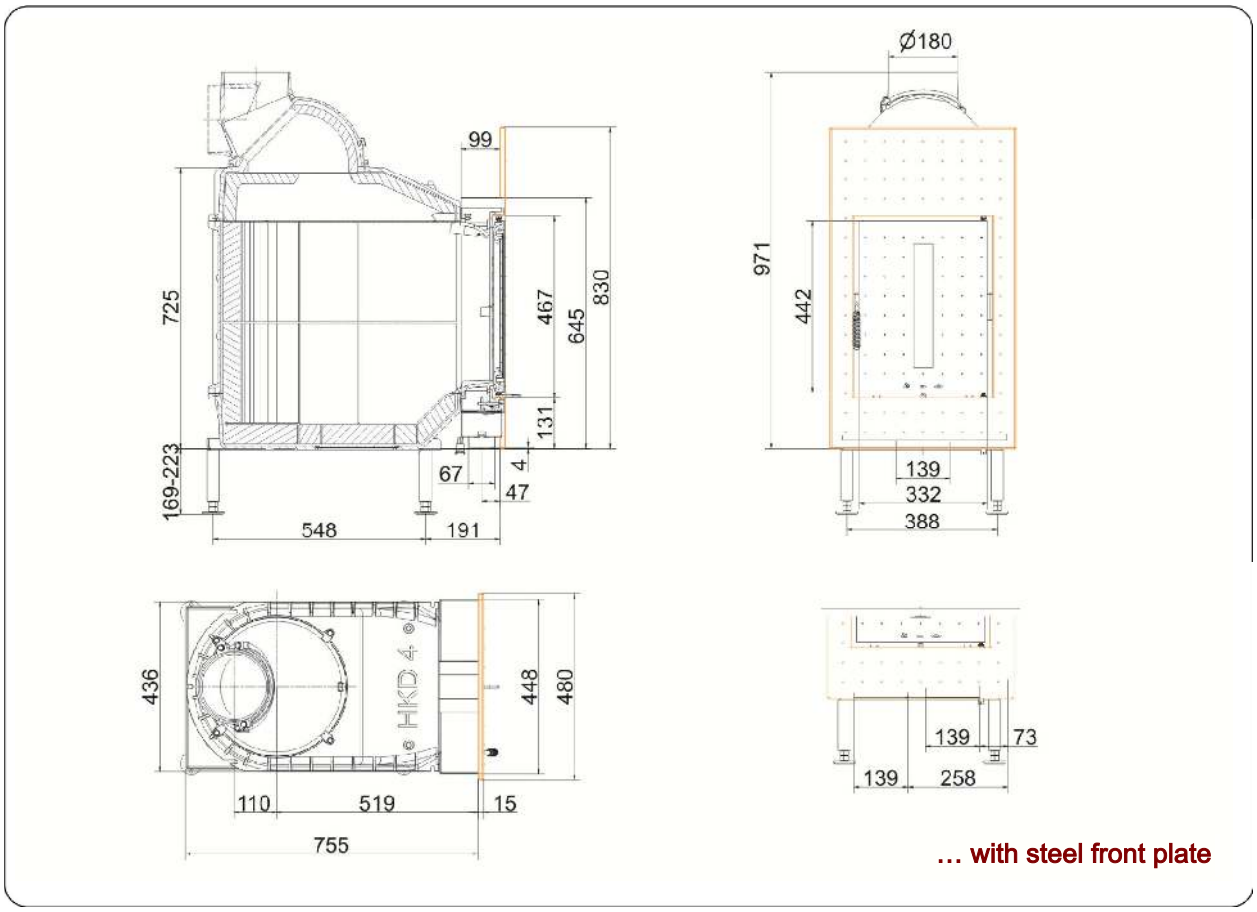

… with steel front plate

We suggest for CAD planing Palette CAD. Permanent updated drawings: www.brunner.de
Frames / front versions are marked colored.

Dimension sheet | **HKD 4.1**

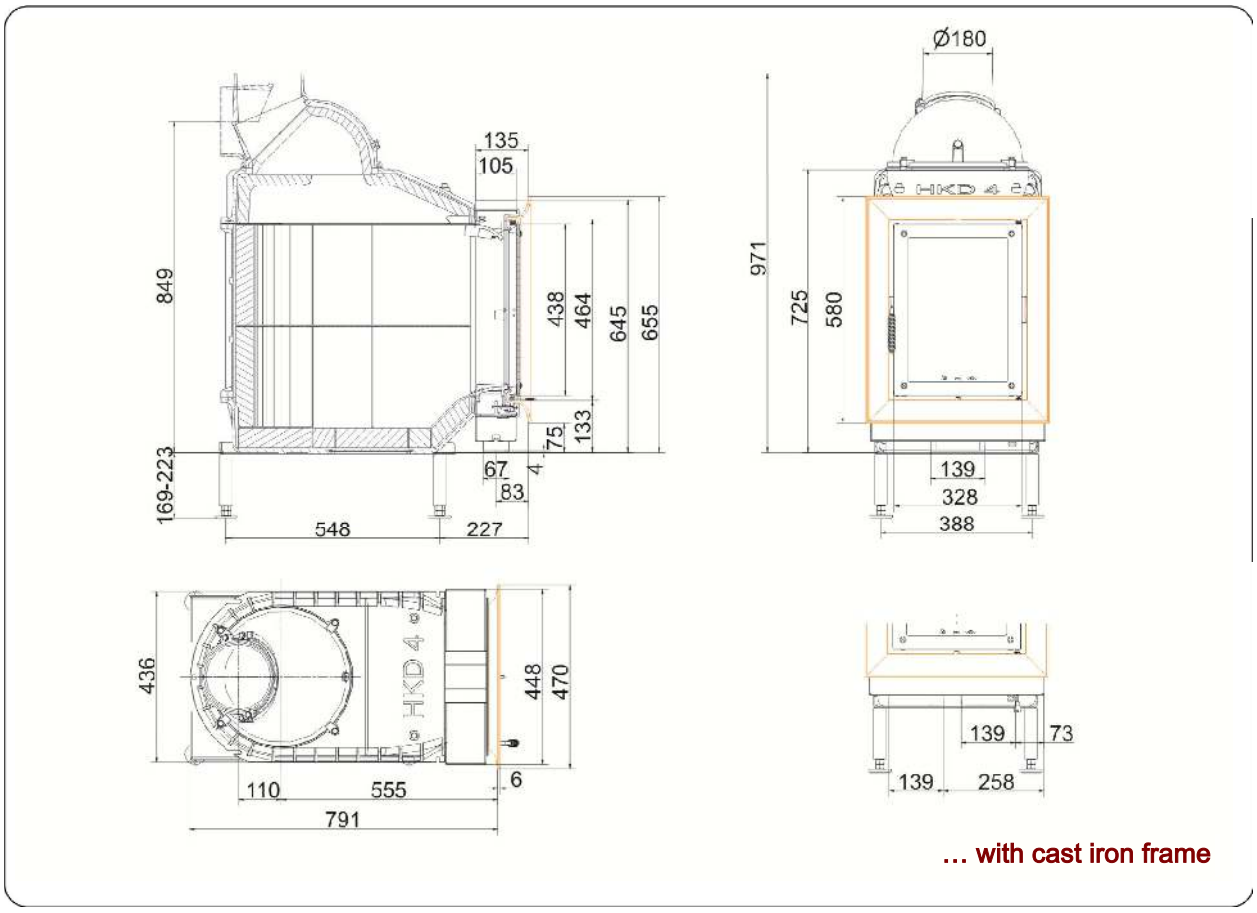

… with cast iron frame

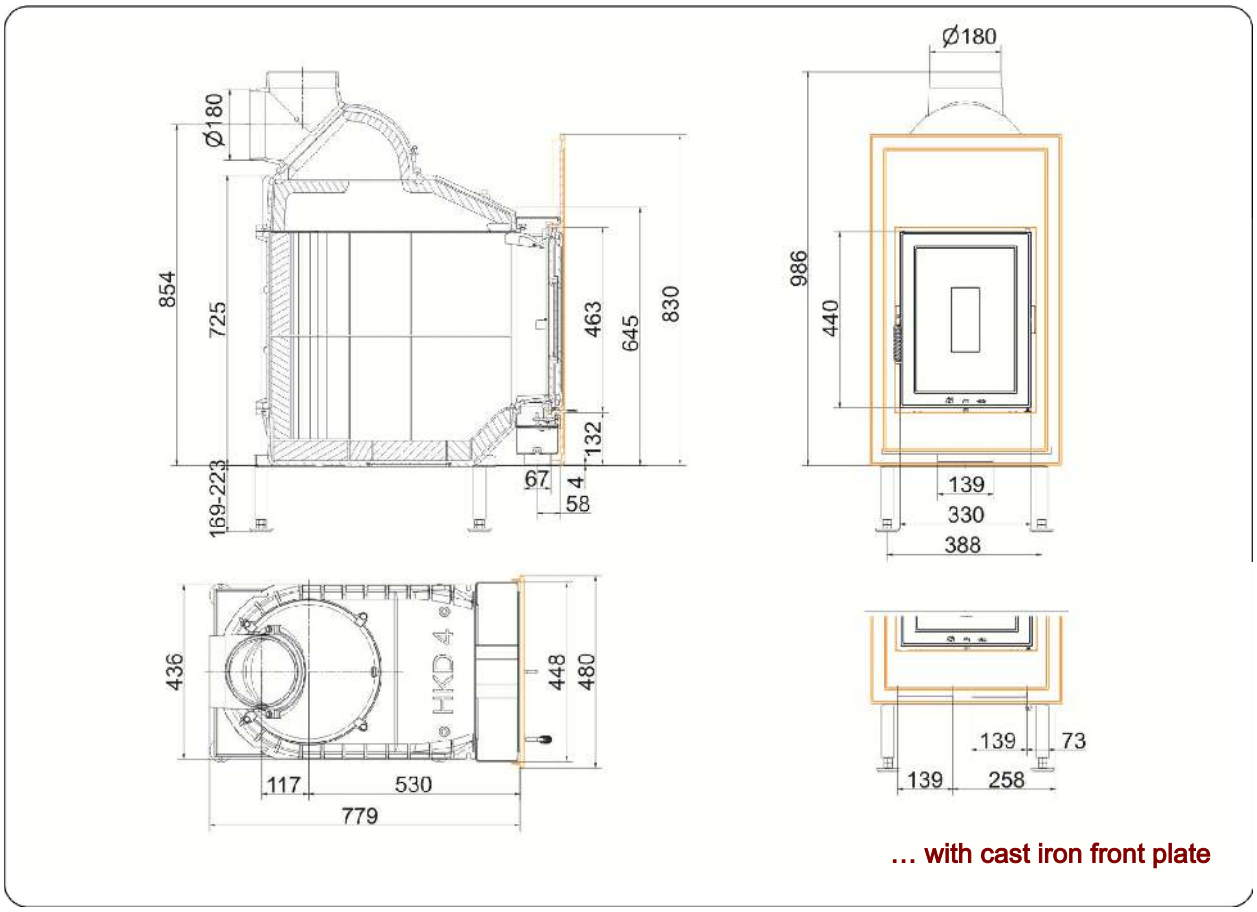

… with cast iron front plate

We suggest for CAD planing Palette CAD. Permanent updated drawings: www.brunner.de
Frames / front versions are marked colored.

Dimension sheet | **HKD 4.1**

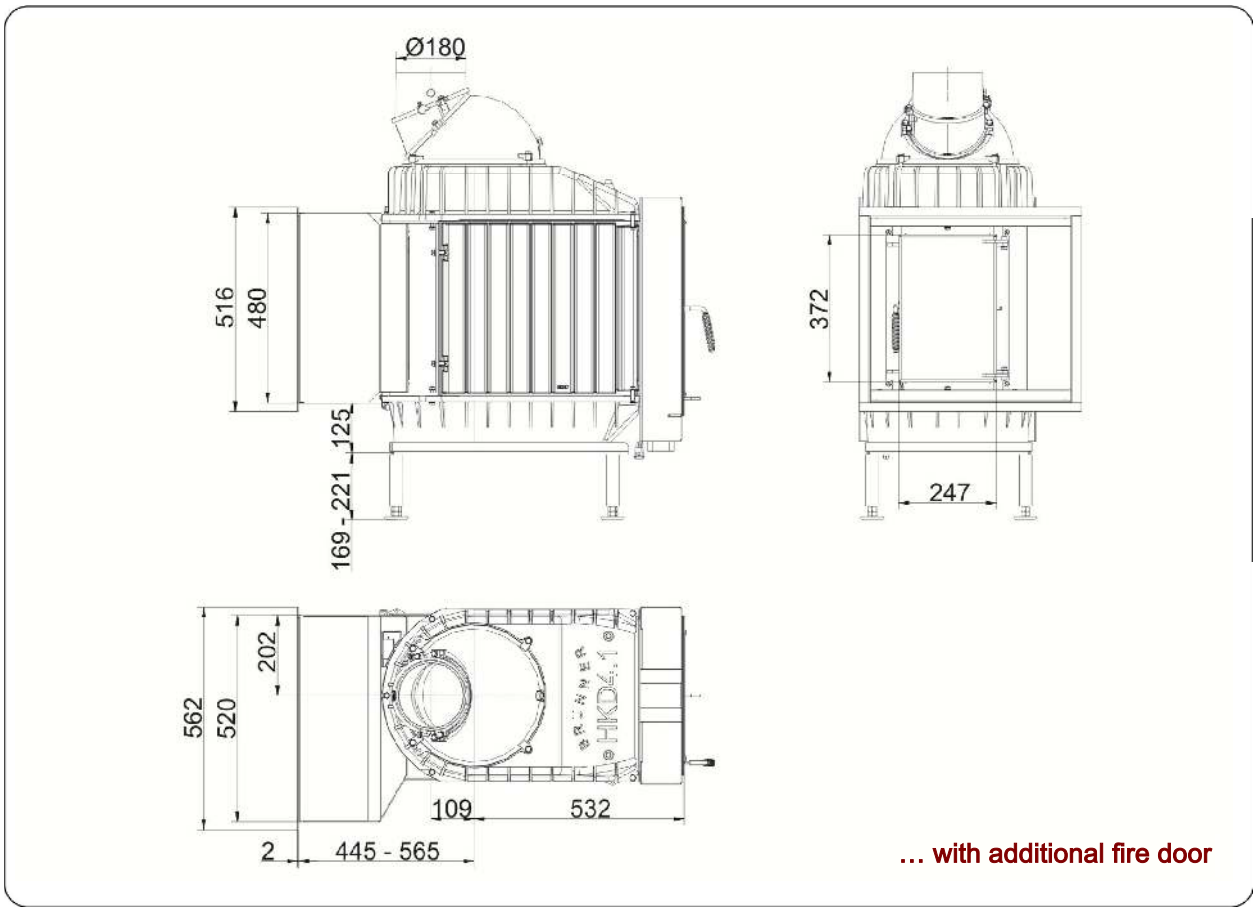

… with additional fire door

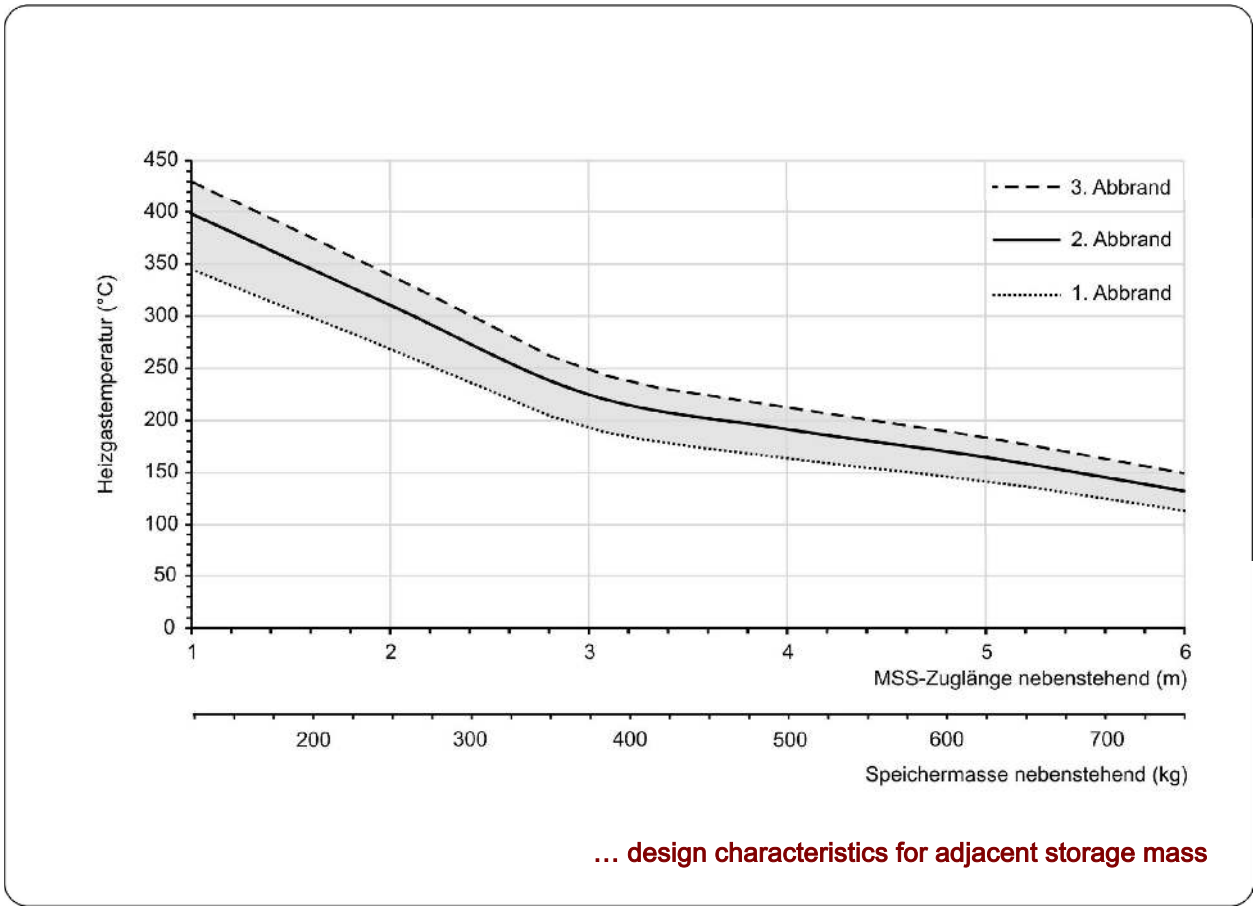

… design characteristics for adjacent storage mass

We suggest for CAD planing Palette CAD. Permanent updated drawings: www.brunner.de
Frames / front versions are marked colored.

Planning and installation

HKD 4.1

Tested according to		EN 13229 W	EN 13229 WA
Values measured at		nominal load	accumulation
Suitable for all construction types according to rules		OK	OK
Data for functional demonstration			
Rated heat power	kW	11	-
Firewood consumption	kg/h	3	5,5
Combustion performance	kW	13	23
Flue gas mass flow	g/s	13	20
Outlet temperature (before heating surface)	°C	510	620
Flue gas temperature after			
attached steel smoke hood	°C	-	-
2 x adjoining cast iron radiator	°C	140	160
accumulation rings (MAS) 1)	°C	-	-
4,9 m adjoining ceramic accumulator 2)	°C	-	180
3,4 m accumulation stones (MSS) 2)	°C	-	210
water boiler	°C	-	-
Necessary supply pressure	Pa	15	15
Combustion air consumption	m³/h	35	60
Combustion air connection Ø	mm	125	125
Heat distribution			
Insert / heating surface	%	45 / 45	45 / 45
Glass (single / double)	%	- / 10	- / 10
Boiler	%	-	-
Vent cross-sections 4)			
Supply air	cm²	750 / 250 / 1000	750 / 250 / 1000
Warm air	cm²	750 / 250 / 1000	750 / 250 / 1000
Min. distances of fireplace			
To insulation layer	cm	8	8
To the ground	cm	15	15
Heat insulation without / with 3) **air gratings**			
Adjacent wall	cm	12 / 9	12 / 9
Floor	cm	0	0
Ceiling	cm	25 / 18	25 / 18
Insulation of additional fire door DHT	cm	6	6
Brick lining of protected walls	cm	10	10
Weight			
Fireplace + burning chamber	kg	145 + 96	
meets requirement limit values for			
Germany / Austria / Switzerland / Norway		1.BImSchV (Stufe 2) / 15a BVG (2015) / LRV / -	

1) Throttle flap recommended
2) Approximate value. Determination according to design characteristics for adjacent storage mass or proof of function provided by calculation
3) Values with air gratings, stove casing is heat conducting
4) for firebox / flue gas pipe / metallic reheating surface

Ulrich Brunner GmbH
Zellhuber Ring 17 -18
D-84307 Eggenfelden
Telefon: +49 / (0)87 21 / 7 71-0
Telefax: +49 / (0)87 21 / 7 71-100
info@brunner.eu | www.brunner.eu

BRUNNER products are offered and sold only by qualified dealers and service centres.
Subject to technical and assortment changes. Errors excepted. (07/16)