LH-100

1545802

1

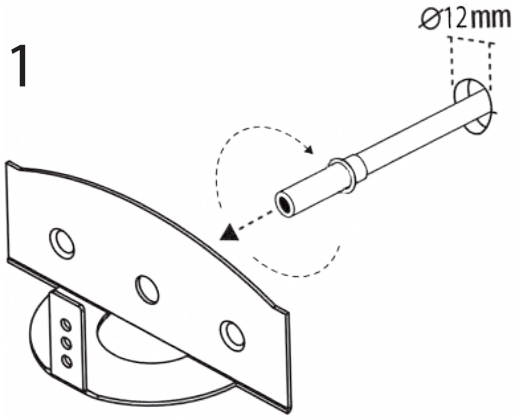

2

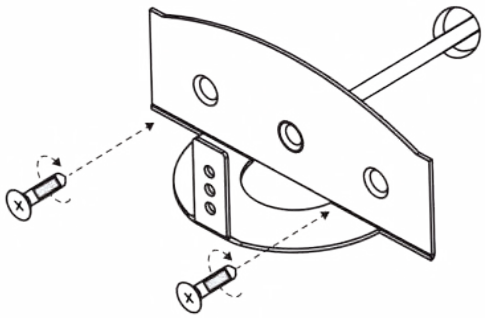

3

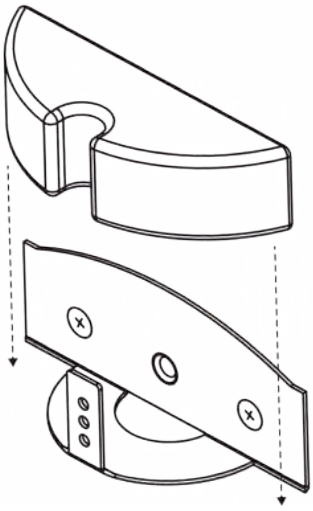

OK

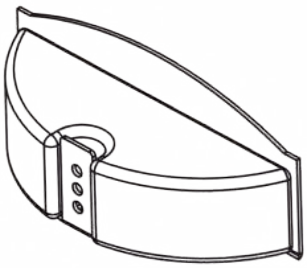

Cariitti Oy
www.cariitti.com

Subject to change.

FIBER

1

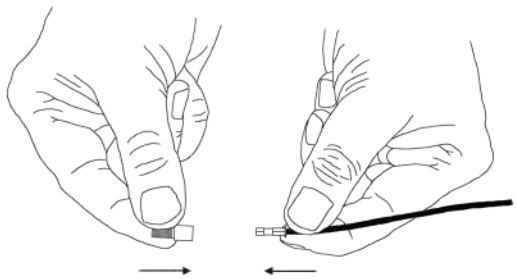

2



3

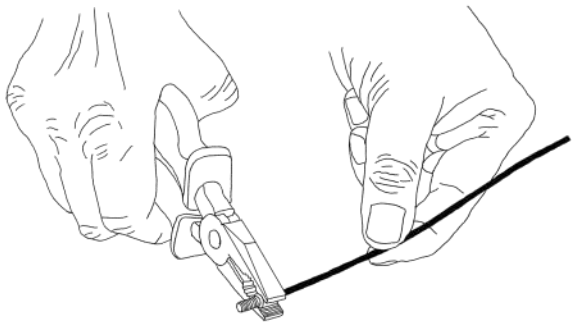

LED

