Wood burning heater Harvia Pro 26 black

WK260

Harvia 26 Pro brings top-class bathing to larger saunas. The large number of stones ensures good heat even if the fire dies down. The stove features a cast-iron glass door and an air-flow spoiler made of stainless steel. The adjustable legs make the stove easy to place in the sauna. The stove can be equipped with a pipe mounted water heater. The outer casing of the stove is painted graphite black.



Features

Main material : Steel

H x W x D : 810.0 x 430.0 x 510.0 mm

Net weight (kg) : 57.8

Stone amount (kg) : 50.0

ID	GTIN	Power	Sauna room size min - max m3
WK260	6417659001045	26.6 kW	10.0-26.0



Spare parts

Product	ID	Pcs
Furnace grate	ZKIP-10	1
Connection pipe	ZKIP-130	1
Glass for stove door 184*210 mm	ZTS-36	
Ashpan RST Pro	ZKIP-720	
Hinge pin	ZKIP-50	1
Stove body (26)	ZH1-300	1
Harvia mark	ZH1-170	
Packing box H20/26	ZH1-190	
Handle for stove + screws	ZKIP-670	1
Handle for ash box	ZKIP-680	
Stove door with glass	ZROST-048	
Air flow spoiler Pro 2019	ZROST-601	1
	ZKIP-155	
Handle and screws, Chrome	SPZKIP-670	
Adjustable legs for LG150/SL	SPZKIP-918	
Hinge pin	SPZKIP-50	
Air flow spoiler Pro 2019	SPZROST-601	
Ashtray black, sauna heaters	SP682	
Cap for smoke hole (Ø 50 mm)	SPZKIP-170	
Glass 184x210x4 mm Stoves 2006-, transparent	SPZTS-36	
Stove door with glass (from 2006)	SP048	
Cast-iron grating 135x290mm, sauna heaters	SPZKIP-10	

Technical details

Technical data	Type / attribute	WK260
	Color	Black
	Power output	26.6 kW
	Stone amount (kg)	50
Dimensions	Product width	430
	Product height	810
	Product depth (mm)	510
	Net weight (kg)	57.8
	Gross weight	59.9
	Package width	580
	Package height	855
	Package depth	475
Connections	Flue connection locations	Back, Top
	Chimney connection diameter	115
Safety and installation dimensions	Safety distance front (non-combustible materials)	375
	Safety distance front (combustible materials)	375
	Safety distance right side (combustible materials)	375
	Safety distance right side non-combustible materials	100
	Safety distance left side (combustible materials)	375
	Safety distance left side non-combustible materials	100



Technical details

Technical data	Type / attribute	WK260
	Safety distance behind (non-combustible materials)	100
	Safety distance behind (combustible materials)	375
	Safety distance (Ceiling)	1280
	Room min. height(depends on connections and therefore from output, star/delta)	2090

Technical images

1.1. Stove Parts
A. Upper connection opening
B. Rear connection opening
C. Soot opening
D. Stove door
E. Ash box

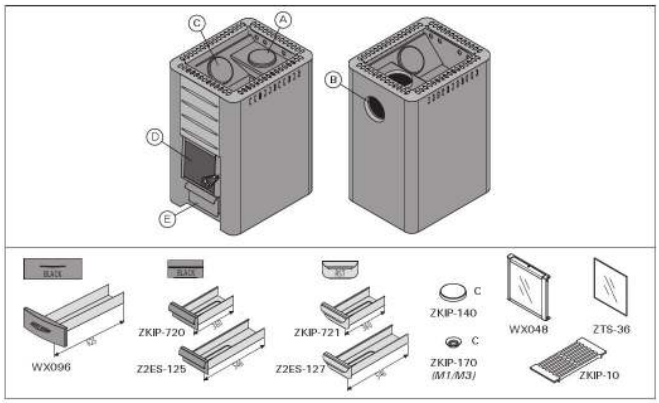

Stove parts. Note! Only use replacement parts recommended by the manufacturer. Unauthorised modification of the stove is prohibited.

	A min.	B min.	C min.	D min.
M1, M2, M3/SL, Classic 140	1200	250	300	300
20 Pro, 20 SL/Duo, 20 ES Pro/S20 Boiler, 20 SL Boiler, Premium-VS, Classic 220/Duo, 20 RS/LS Pro	1300	300	300	300
28 Pro, Classic 280	1280	375	375	375
36, 36 Duo	1250	500	500	500
Linear 16, 16	1300	300	350	400
Linear 22, 22/S, Linear 22 RS/LS/TS, 22 RS/LS/TS S	1299	400	380	500
Linear 28	1380	400	400	500

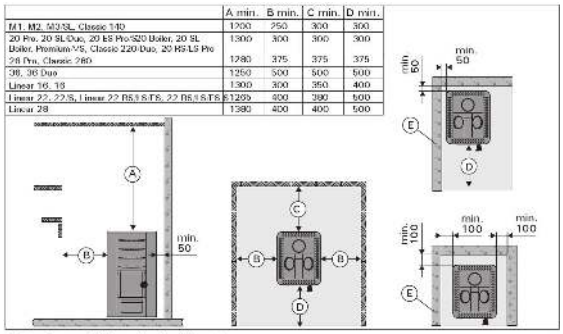

Safety distances (all dimensions in millimeters)

WX017	B min.
M1, M2, M3/SL, 20 Pro, 20 SL/Duo, 20 ES Pro/S, 20 Boiler, 20 SL Boiler, Premium, Classic 140/SL, Classic 220/Duo	300
28 Pro, Classic 280	375
Linear 16, 16	300
Linear 22 28, Linear 22 ES, 22 ES S, 22/S	400

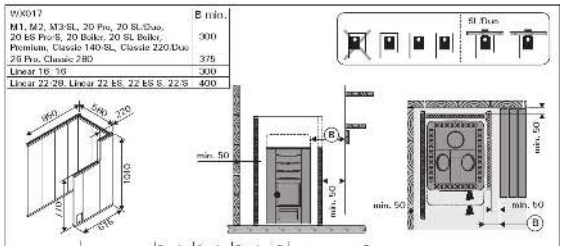

		B min.	C min.	D min.	F
WL400/WL450	M1, M2, M3/SL	50	50	300	30
WL500/WL550	20 Pro/SL/Duo 20 Boiler, 20 SL Boiler	62	62	422	30
WL600/WL650	20 ES Pro/S				
WL700/WL750	28 Pro	73	73	526	30
WL800/WL850	36, 36 Duo	90	90	700	30
WL500/WL580	20 RS/LS Pro	62	62	422	30
WL425/WL475	Linear 16, 16	30	30	400	32
WL525/WL575	Linear 22, 22 S	70	70	500	40
WL525/WL585	Linear 22 RS/LS, 22 RS/LS S				
WL530/WL580	Linear 22 ES, 22 ES S				
WL725/WL775	Linear 28				

Safety distances with protective sheaths (all dimensions in millimeters)

3.4. Accessories
A. Harvia steel chimney WHP1500.
B. Water heater VL22I. Installed on the top of the upper connection opening. When a protective sheath or other protection is used that is not large enough to protect the inflammable materials around the stove from the heat radiation of the pipe between the water heater and smoke flue, you must install a radiation cover around the pipe.
C. Radiation cover WZ020130. Installed around the smoke pipe.
D. Harvia protective sheath WX017.
E. Harvia protective sheath WL400–WL775.

F. Harvia protective bedding WX018, WL100. (not for models 20 RS/LS Pro, 36, 36 Duo, Premium VS, Linear 22 RS/LS, 22 RS/LS S).
G. Harvia protective bedding WL110 (not for models 20 ES Pro/S, Linear 22 ES, 22 ES S).
H. Angle smoke pipe. Different models.
I. Lead-through flange for smoke pipe WZ020115. Covers the edges of the flue opening and the sealing in the wall. Made of stainless steel. Consists of two parts to make it useable with differently inclined smoke pipes.
J. Masonry connector WZ011115. Connected to the flue opening, does not require other seals. The inner side already has a seal.

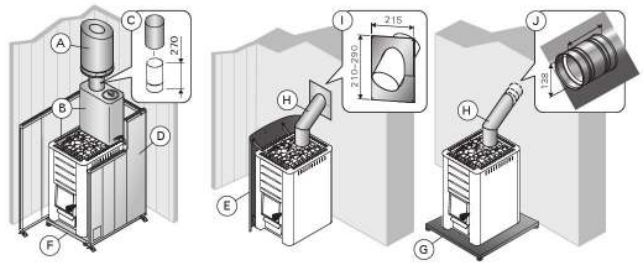

Accessories (all dimensions in millimeters)