BRUNNER WATER BOILERS



Kompakt-Kessel B7

State: 16.03.2015



BRUNNER®

made in germany

Dimension sheet | **Kompakt-Kessel B7**

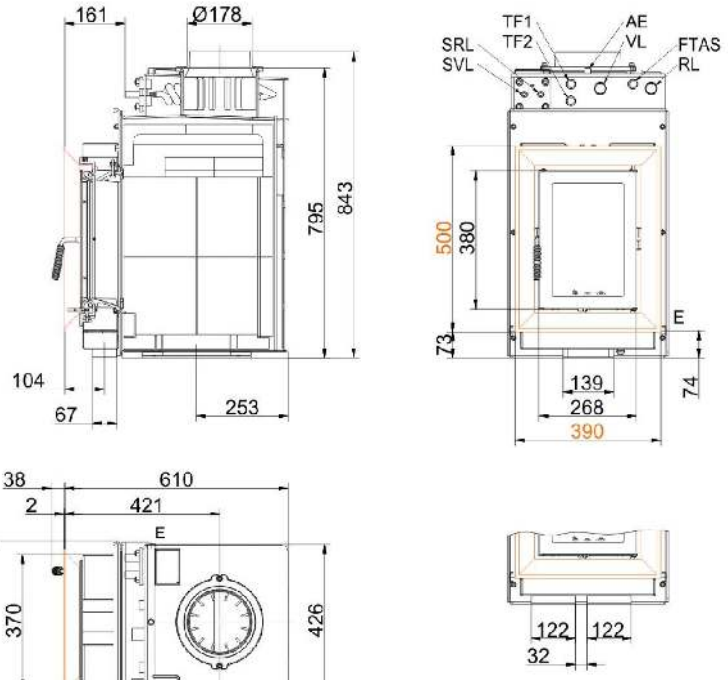

VL	supply 1"
RL	return boiler 1"
E	drain 1/2"
SVL	supply cooling pipe outlet
SRL	return cooling pipe outlet
FTAS	socket for thermometer cooling
TF1	socket 1/2" for thermometer
TF2	socket 1/2" for thermometer
AE	socket 1/2" for vent

… with steel door frame

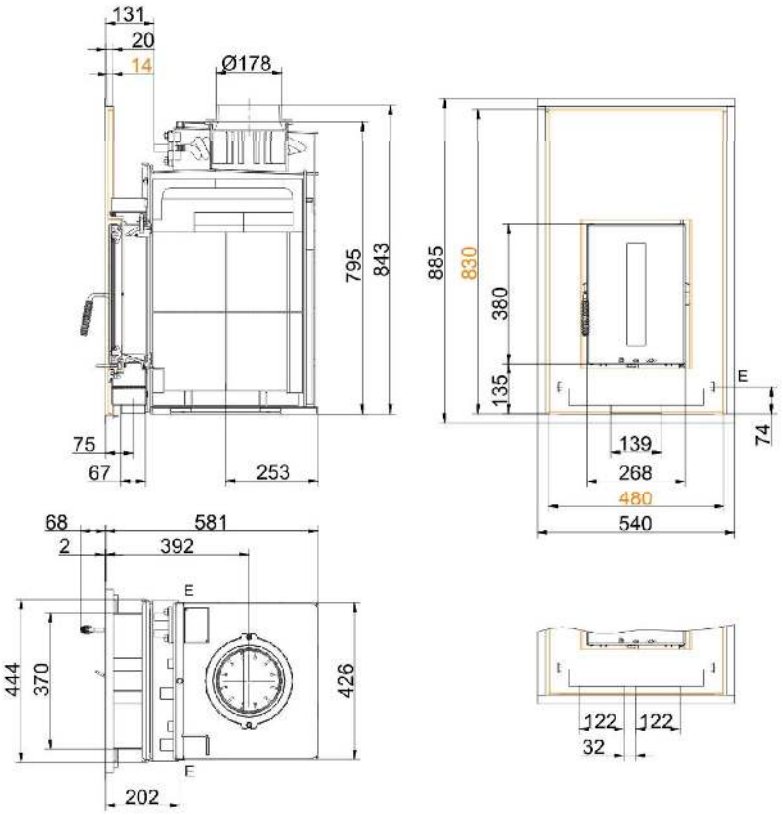

VL	supply 1"
RL	return boiler 1"
E	drain 1/2"
SVL	supply cooling pipe outlet
SRL	return cooling pipe outlet
FTAS	socket for thermometer cooling
TF1	socket 1/2" for thermometer
TF2	socket 1/2" for thermometer
AE	socket 1/2" for vent

… with steel front plate

We suggest for CAD planing Palette CAD. Permanent updated drawings: www.brunner.de
Frames / front versions are marked colored.

Dimension sheet | **Kompakt-Kessel B7**

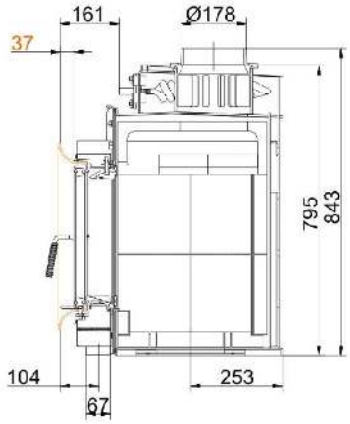

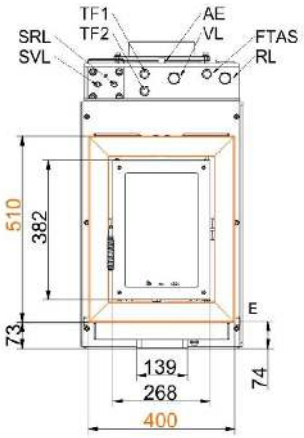

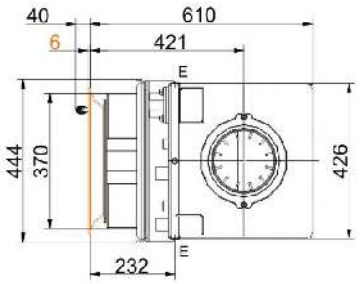

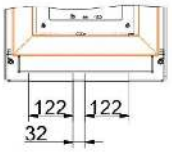

VL	supply 1"
RL	return boiler 1"
E	drain 1/2"
SVL	supply cooling pipe outlet
SRL	return cooling pipe outlet
FTAS	socket for thermometer cooling
TF1	socket 1/2" for thermometer
TF2	socket 1/2" for thermometer
AE	socket 1/2" for vent

… with cast iron frame

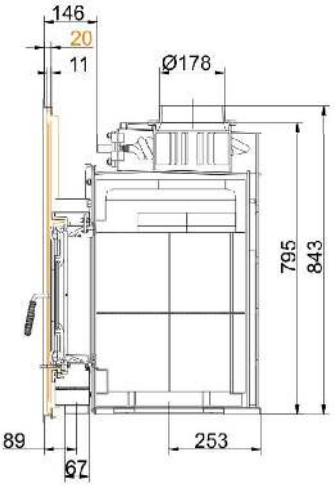

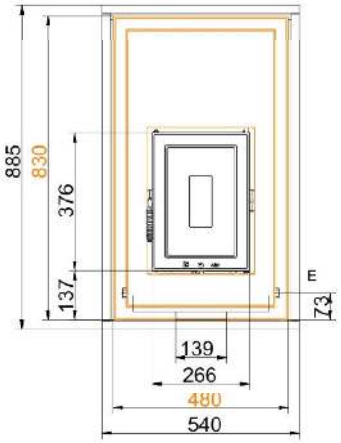

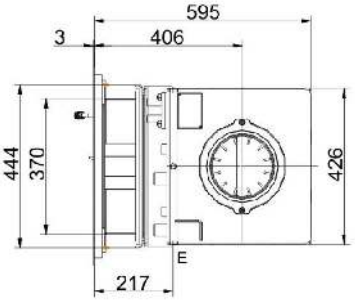

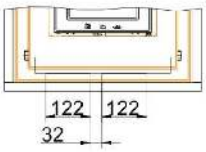

VL	supply 1"
RL	return boiler 1"
E	drain 1/2"
SVL	supply cooling pipe outlet
SRL	return cooling pipe outlet
FTAS	socket for thermometer cooling
TF1	socket 1/2" for thermometer
TF2	socket 1/2" for thermometer
AE	socket 1/2" for vent

… with cast iron front plate

We suggest for CAD planing Palette CAD. Permanent updated drawings: www.brunner.de
Frames / front versions are marked colored.

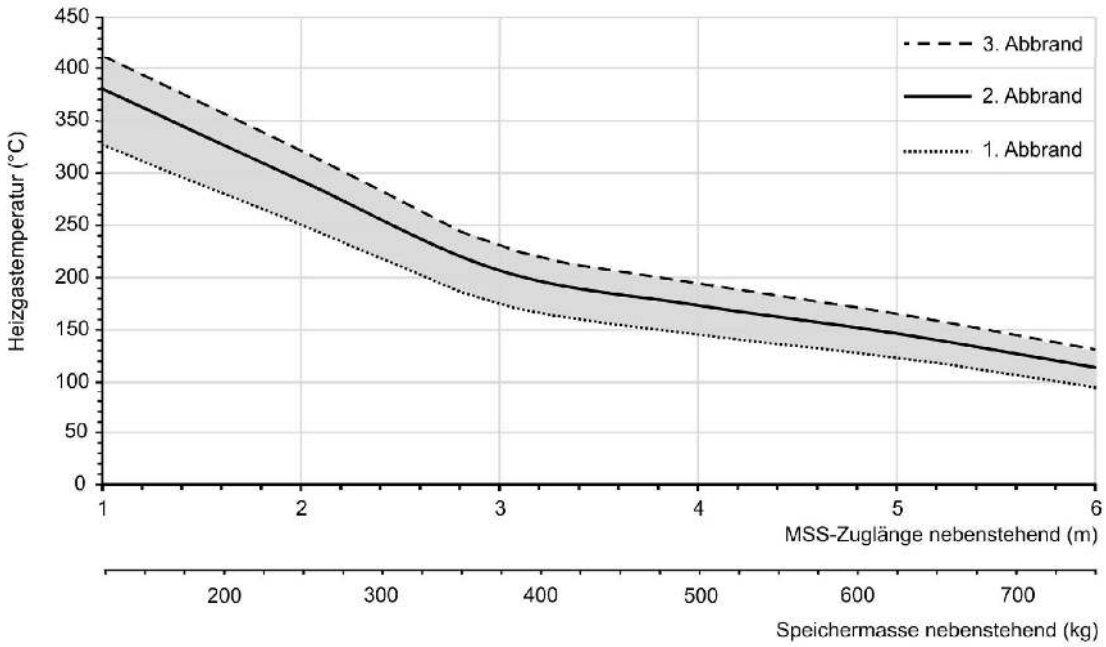

… design characteristics for adjacent storage mass

We suggest for CAD planing Palette CAD. Permanent updated drawings: www.brunner.de
Frames / front versions are marked colored.

Planning and installation

Kompakt-Kessel B7

Tested according to		EN 13229 W	EN 13229 W
Values for mode of operation		rated load	practical avg.
Data for functional demonstration			
Rated heat power	kW	12	-
Rated heat power	kg/h	3,5	4,6
Combustion performance	kW	15	20
Flue gas mass flow	g/s	13	18
Outlet temperature (before heating surface)	°C	460	490
Flue gas temperature after			
attached steel smoke hood	°C	-	-
1 x adjoining cast iron radiator (GNF10)	°C	140	295
accumulation rings (MAS) 1)	°C	-	-
4,1 m adjoining ceramic accumulator 2)	°C	-	180
2,8 m accumulation stones (MSS) 2)	°C	-	215
Boiler	°C	-	-
Necessary supply pressure	Pa	12	15
Combustion air consumption	m³/h	35	45
Combustion air connection Ø	mm	125	125
Heat distribution			
Insert / heating surface	%	12 / 45	12 / 45
Glass (single / double)	%	- / 10	- / 10
Boiler	%	33	33
Vent cross-sections 4)			
Supply air	cm²	150 / 250 / 500	150 / 250 / 500
Warm air	cm²	150 / 250 / 500	150 / 250 / 500
Min. distances of fireplace			
Distance to insulation layer	cm	6	6
Distance to floor	cm	15	15
Heat insulation without / with 3) air gratings			
Wall	cm	10 / 7	10 / 7
Floor	cm	0 / 0	0 / 0
Ceiling	cm	16 / 12	16 / 12
Brick lining of protected walls	cm	10	10
Water boiler data			
Max. operating pressure	bar	3	3
Max. flow temperature	°C	100	100
Water volume	litres	31	31
Connections flow / return	inch	1	1
Weight			
Fireplace + burning chamber	kg	134 + 44	
meets requirement limit values for			
Germany / Austria / Switzerland / Norway		1.BImSchV (Stufe 2) / 15a BVG (2015) / - / -	

1) Throttle flap recommended

2) Approximate value. Determination according to design characteristics for adjacent storage mass or proof of function provided

3) Values with air gratings, stove casing is heat conducting

4) for firebox / flue gas pipe / metallic reheating surface

Ulrich Brunner GmbH
Zellhuber Ring 17 -18
D-84307 Eggenfelden
Telefon: +49 / (0)87 21 / 7 71-0
Telefax: +49 / (0)87 21 / 7 71-100
info@brunner.eu | www.brunner.eu

BRUNNER®

BRUNNER products are offered and sold only by qualified dealers and service centres.
Subject to technical and assortment changes. Errors excepted. (03/15)