HAKA **150/51h**

A+

Technical data
Version **01/2018**

OPERATION WHEN DIRECTLY CONNECTED TO CHIMNEY	
Tested according to	EN 13229
Nominal heat power	16 kW
Efficiency	> 80 %
Consumption of wood	4,5 kg/h
Mass flow of flue gas	15,8 g/s
Average flue gas temperature on the output	 251 °C
Heat distribution fireplace insert door glass (single / double)	 57–68 % 43 / 32 %
Required chimney pressure	12 Pa
Required amount of combustion air	45 m^3/h
Minimum supply air grating cross-section	1 400 cm^2
Minimum outgoing air grating cross-section	1 700 cm^2

OPERATION WITH CONNECTED ACCUMULATION MASS	
Load of wood	6 kg
Total heat output of the burning chamber	24 kW
Mass flow of flue gas	20 g/s
Average flue gas temperature on the output [1] past 3 m of ceramic accumulation system KMS 300 [2]	 403 °C 185 °C
Heat distribution fireplace insert door glass (single / double) adjoining accumulation mass	 40 % 43 / 32 % 17–28 %
Required chimney pressure	12 Pa
Minimum radiant area [3]	ca 5,5 m^2
Required amount of combustion air	60 m^3/h

GENERAL TECHNICAL INFORMATION	
Combustion air connection	Ø 150 mm
Total weight / lining weight	ca. 536 / 175 kg
Use in non-ventilated accumulation builds according to craft rules	suitable
Meets values	BImSchV (Stufe2), 15a BVG

1) The Hoxter products are available in the Austrian stove-calculation program for evaluation of firebrick accumulation systems.
2) Only a sample calculation! For accurate results is evaluation of each system in the KMS-calculation program from the Ortner company necessary.
3) Depends on accumulation period and material characteristics and its thickness. Calculated with heat emission of the radiant area ca. 500 W/m^2.hr

Hoxter gmbh I Hersbrucker Straße 23 I 912 44 Reichenschwand I Germany I info@hoxter.de I +49 (0)9151 8659 163
Hoxter a.s. I Jinacovice 509 I 664 34 Jinacovice I Czech Republic I info@hoxter.eu I +420 518 777 701

hoxter

HAKA **150/51h**

Technical data
Version **01/2018**

M 1 : 10

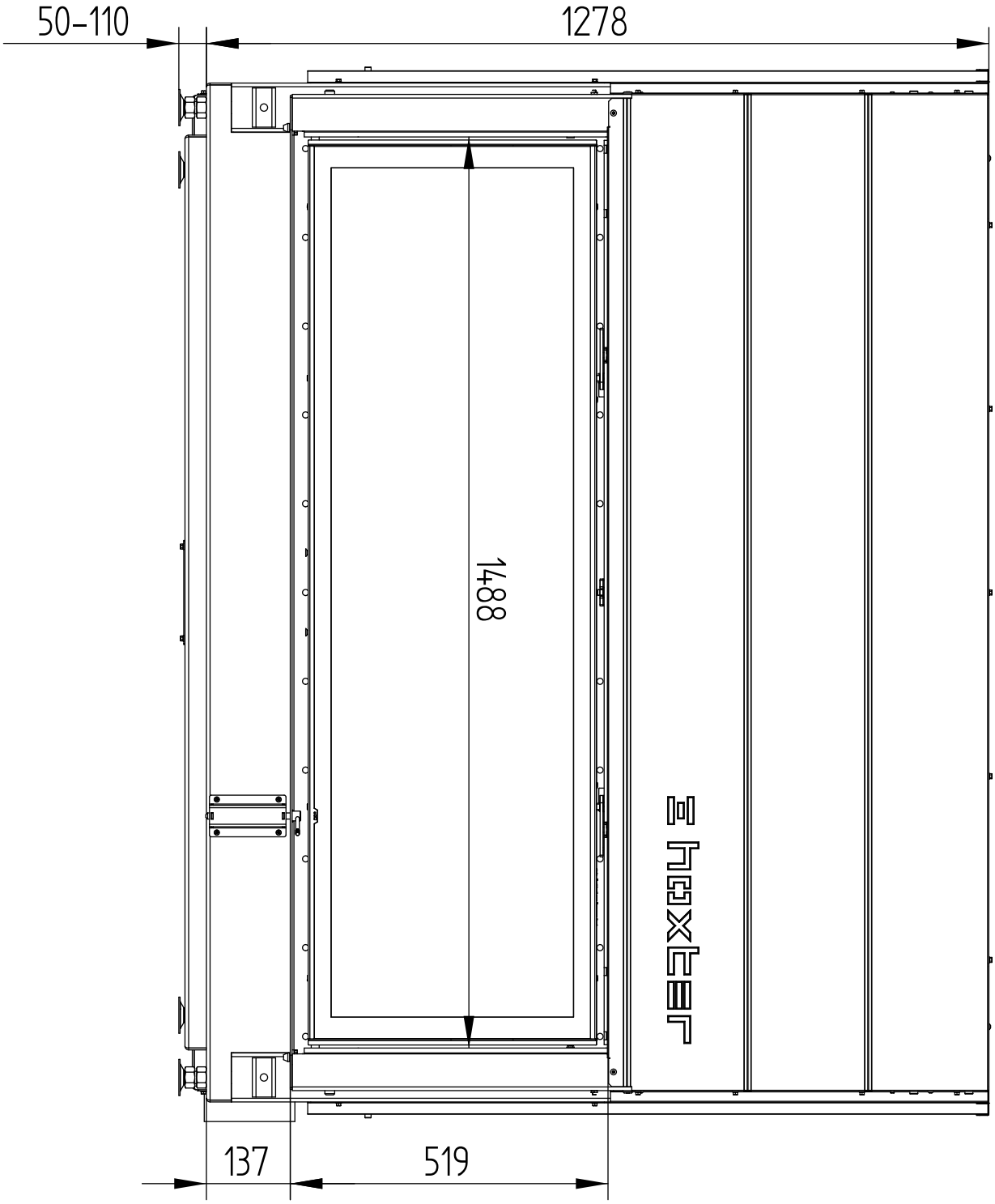

M 1 : 10

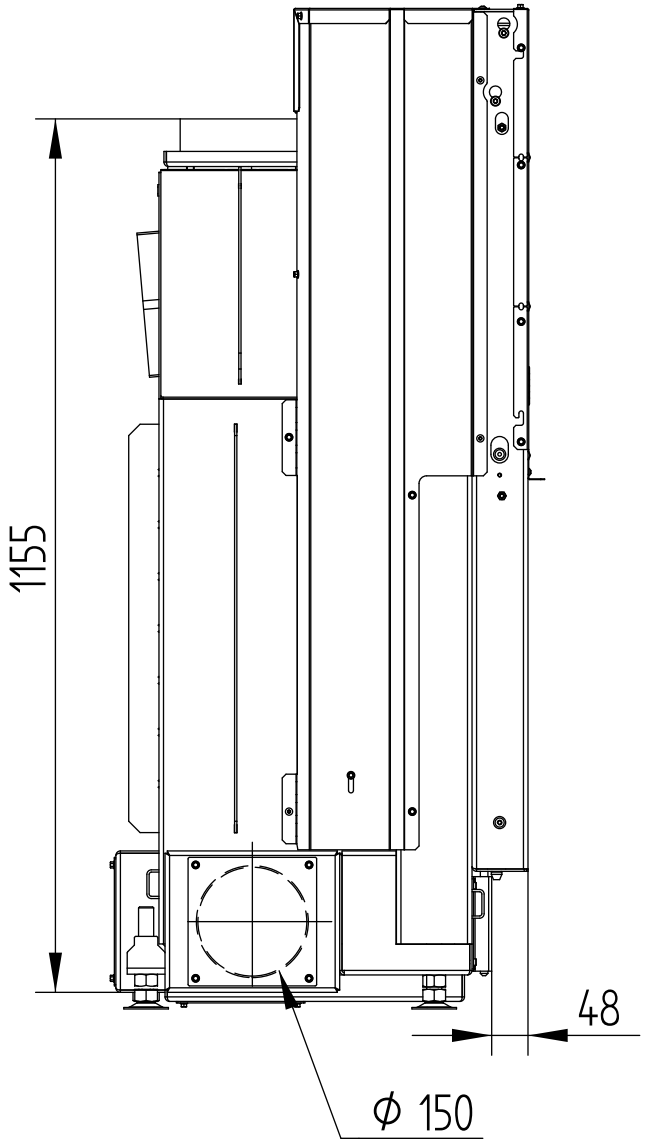

HAKA **150/51h**

Technical data
Version **01/2018**

M 1 : 10

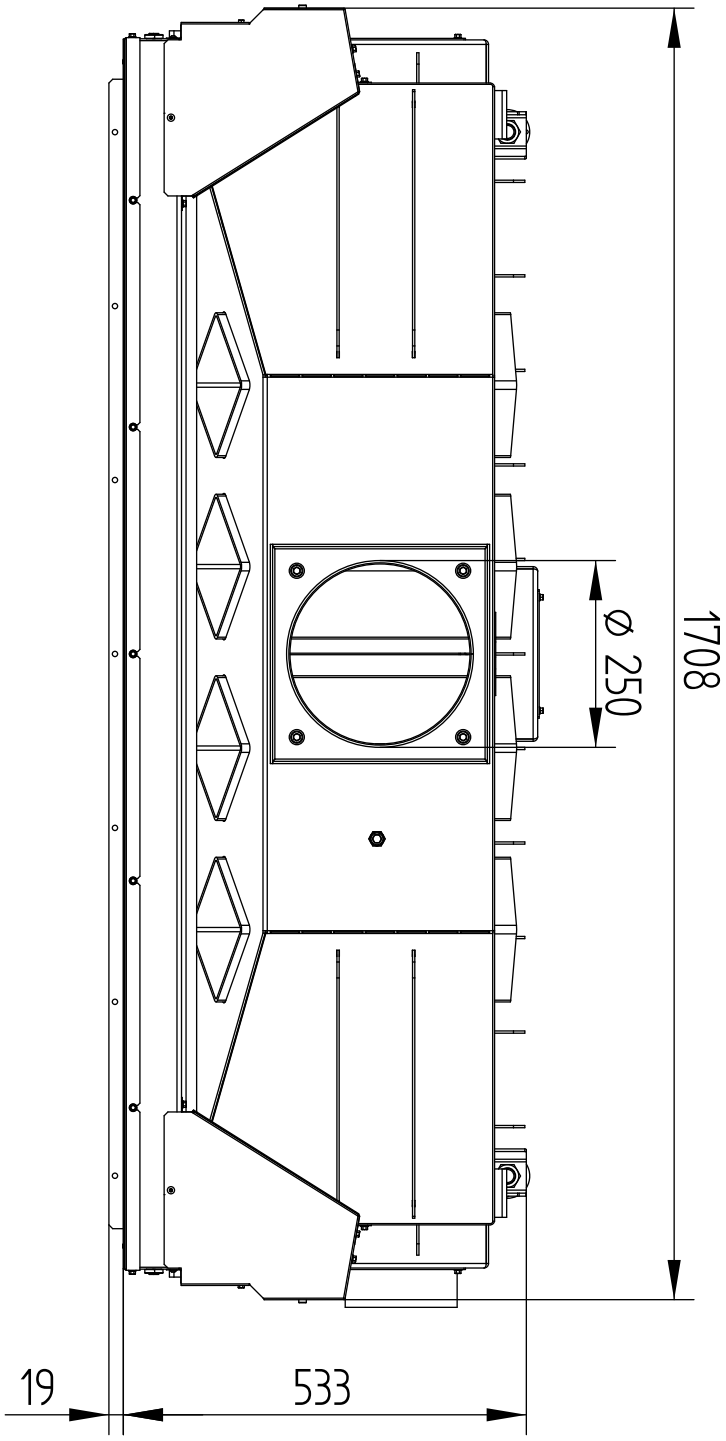

Hoxter gmbh I Hersbrucker Straße 23 I 912 44 Reichenschwand I Germany I info@hoxter.de I +49 (0)9151 8659 163
Hoxter a.s. I Jinacovice 509 I 664 34 Jinacovice I Czech Republic I info@hoxter.eu I +420 518 777 701

HAKA **150/51h**

Technical data
Version **01/2018**

COVER FRAME 4-SIDED 1 x 90°, 50 mm

M 1 : 10

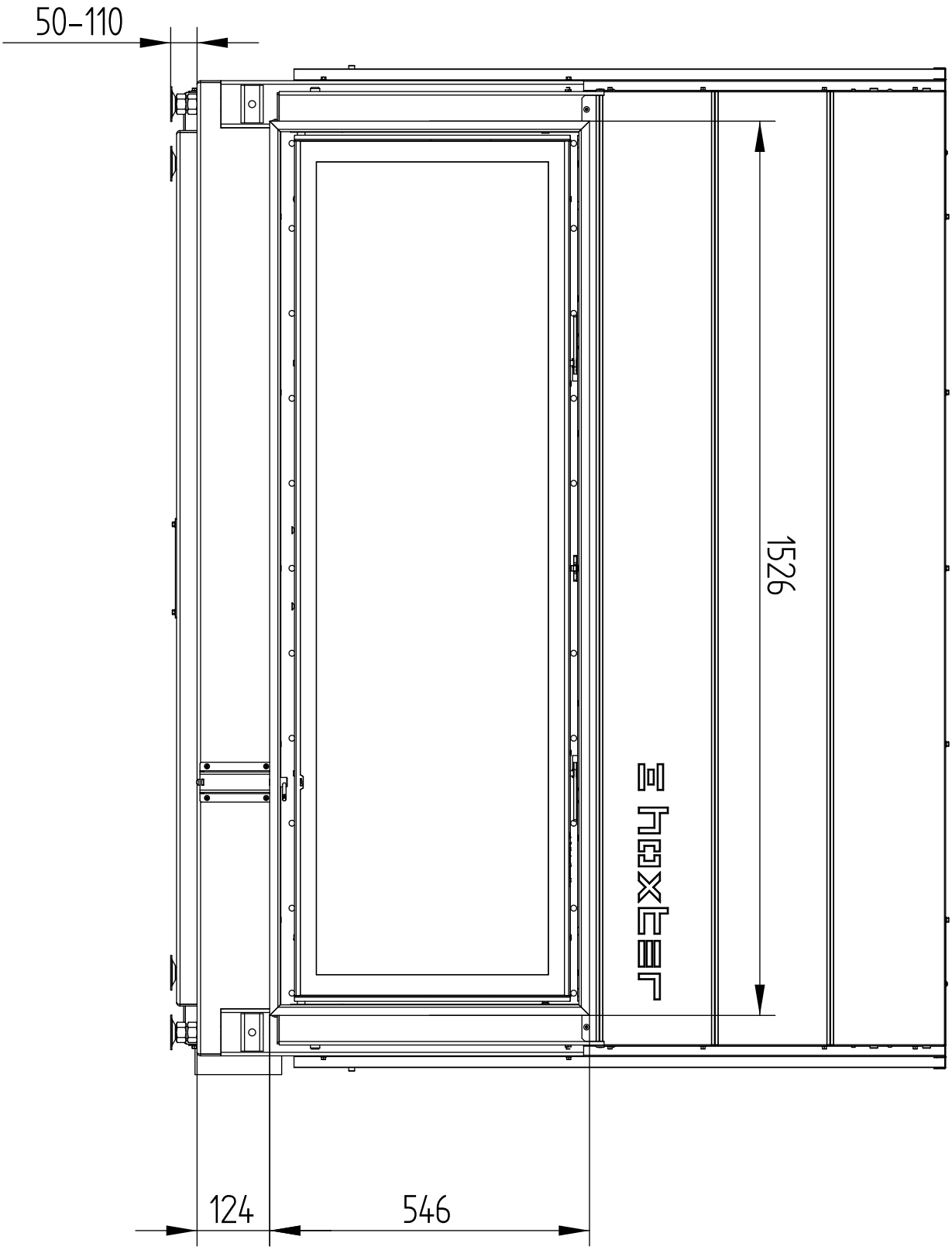

Hoxter gmbh I Hersbrucker Straße 23 I 912 44 Reichenschwand I Germany I info@hoxter.de I +49 (0)9151 8659 163
Hoxter a.s. I Jinacovice 509 I 664 34 Jinacovice I Czech Republic I info@hoxter.eu I +420 518 777 701

HAKA **150/51h**

Technical data
Version **01/2018**

COVER FRAME 4-SIDED 1 x 90°, 50 mm

M 1 : 10

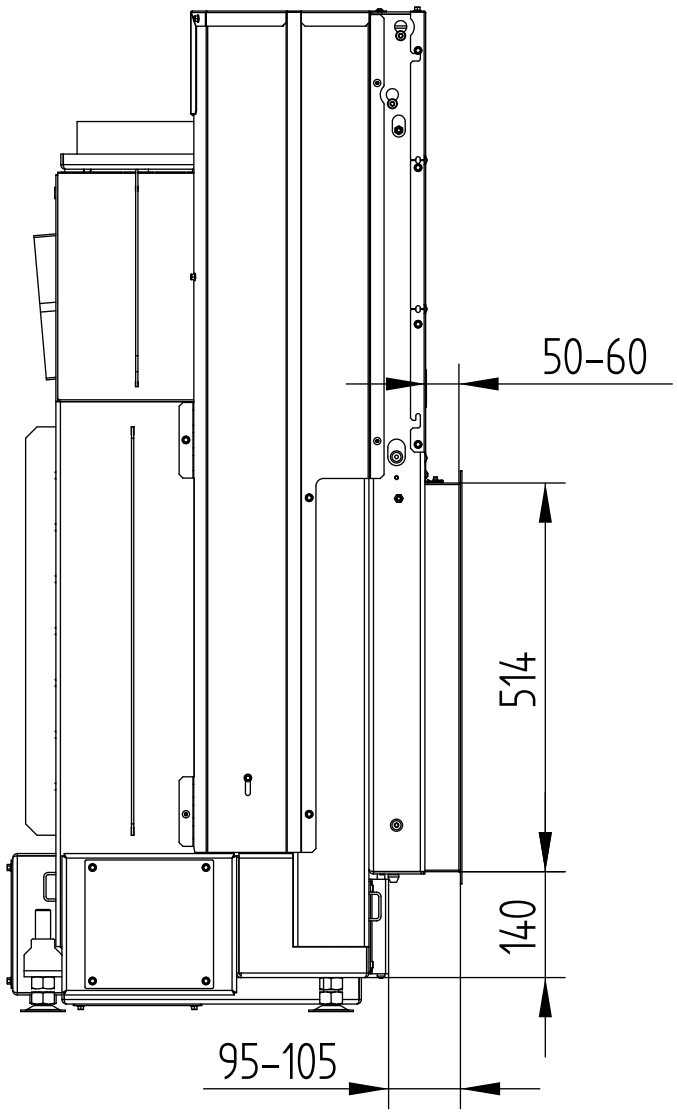

Hoxter gmbh I Hersbrucker Straße 23 I 912 44 Reichenschwand I Germany I info@hoxter.de I +49 (0)9151 8659 163
Hoxter a.s. I Jinacovice 509 I 664 34 Jinacovice I Czech Republic I info@hoxter.eu I +420 518 777 701

HAKA **150/51h**

Technical data
Version **01/2018**

COVER FRAME 4-SIDED 1 x 90°, 50 mm

M 1 : 10

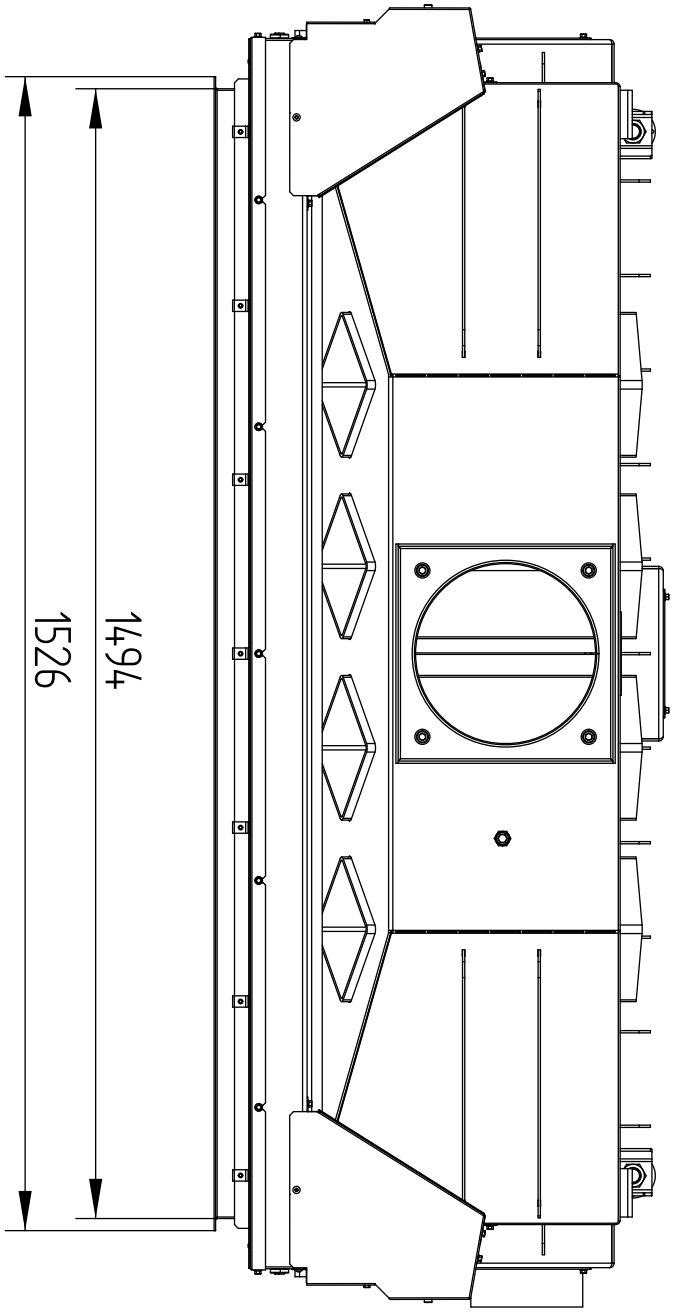

HAKA **150/51h**

COVER FRAME 4-SIDED 1 x 90°, 80 mm

M 1 : 10

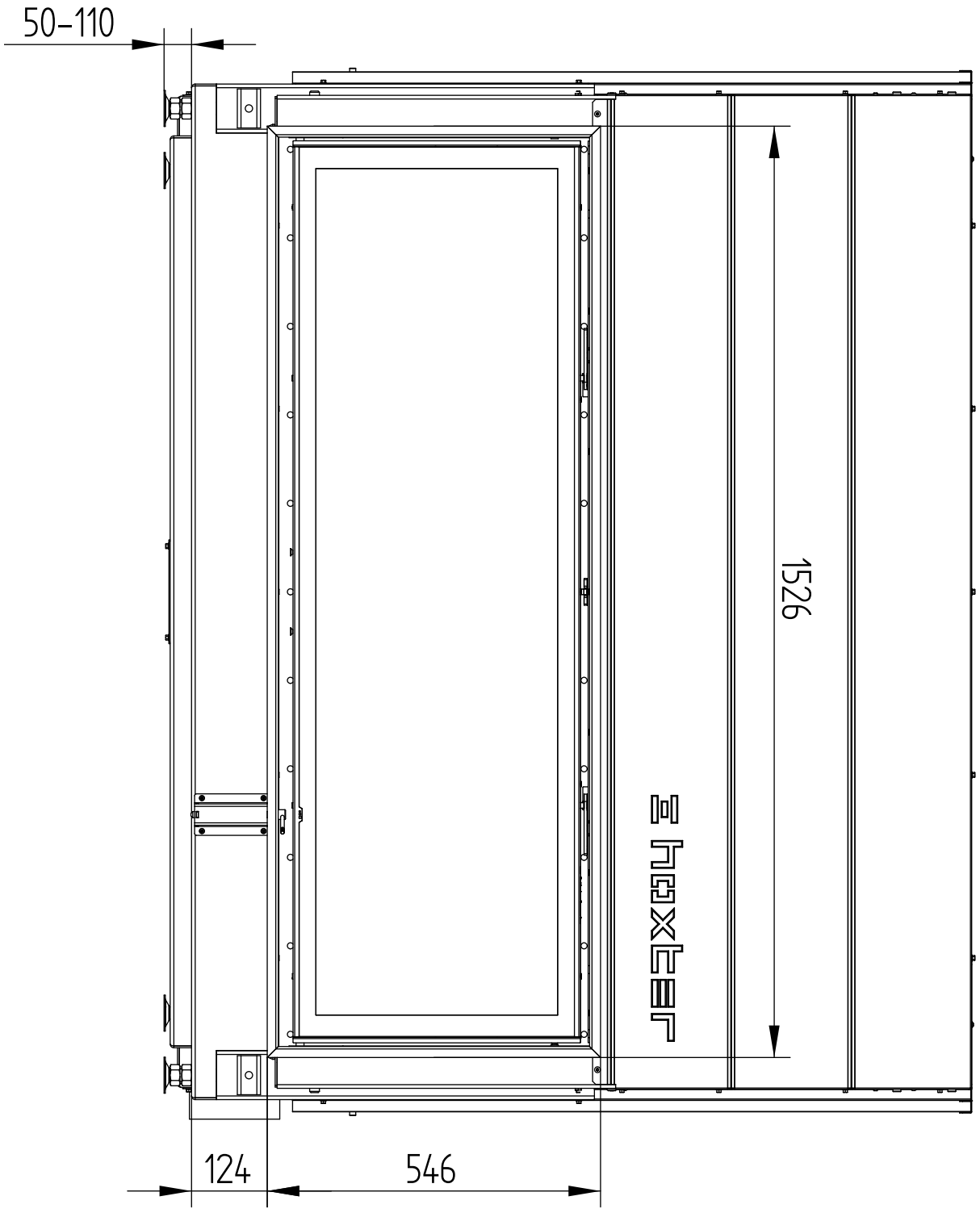

HAKA **150/51h**

Technical data
Version **01/2018**

COVER FRAME 4-SIDED 1 x 90°, 80 mm

M 1 : 10

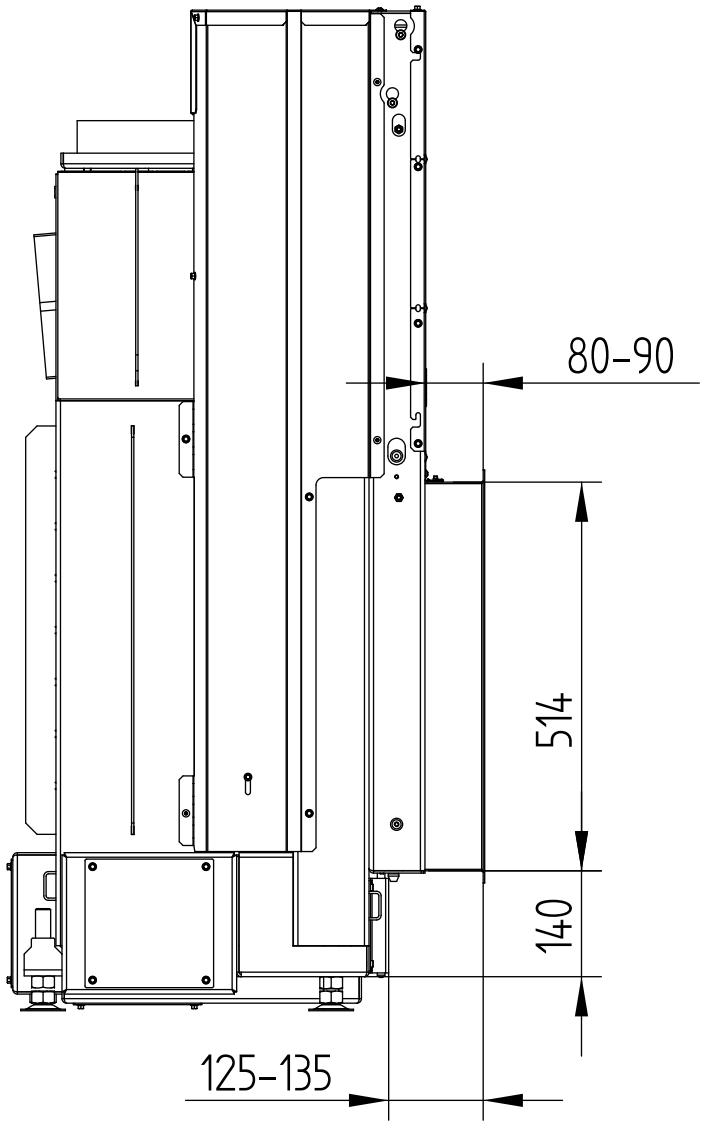

HAKA **150/51h**

COVER FRAME 4-SIDED 1 x 90°, 80 mm

M 1 : 10

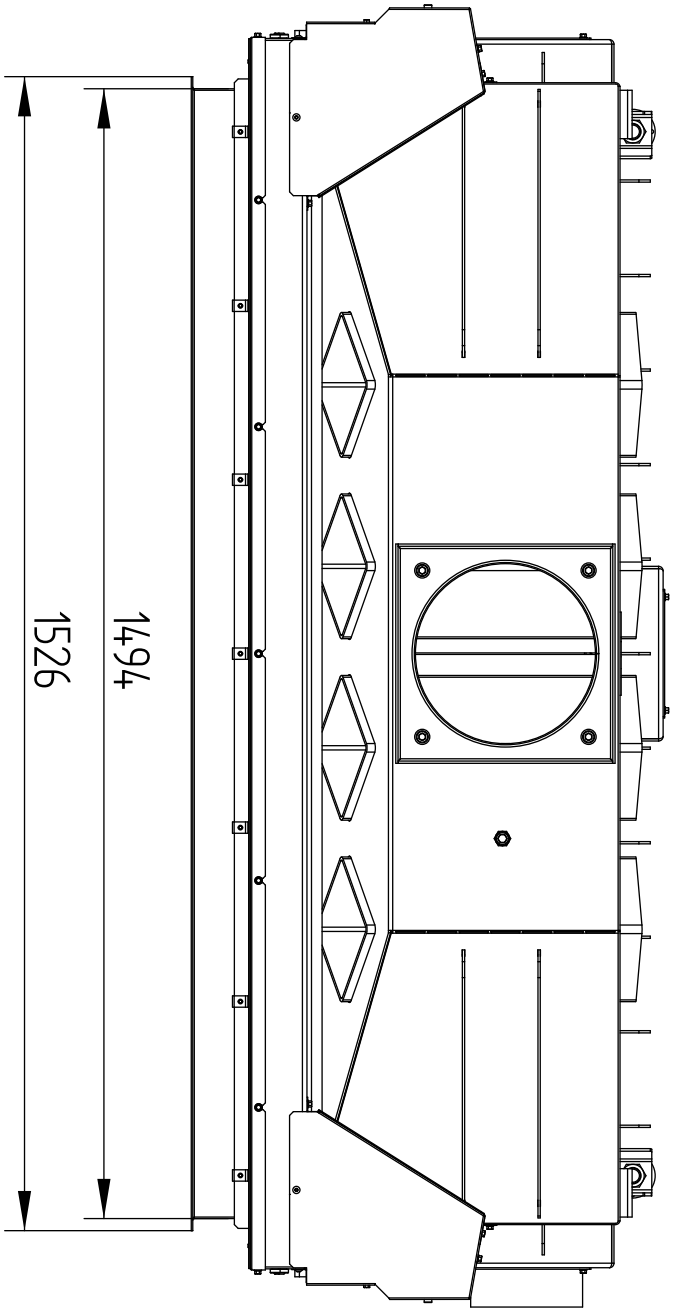

HAKA **150/51h**

BUILD-ON FRAME 4-SIDED, 50 mm

M 1 : 10

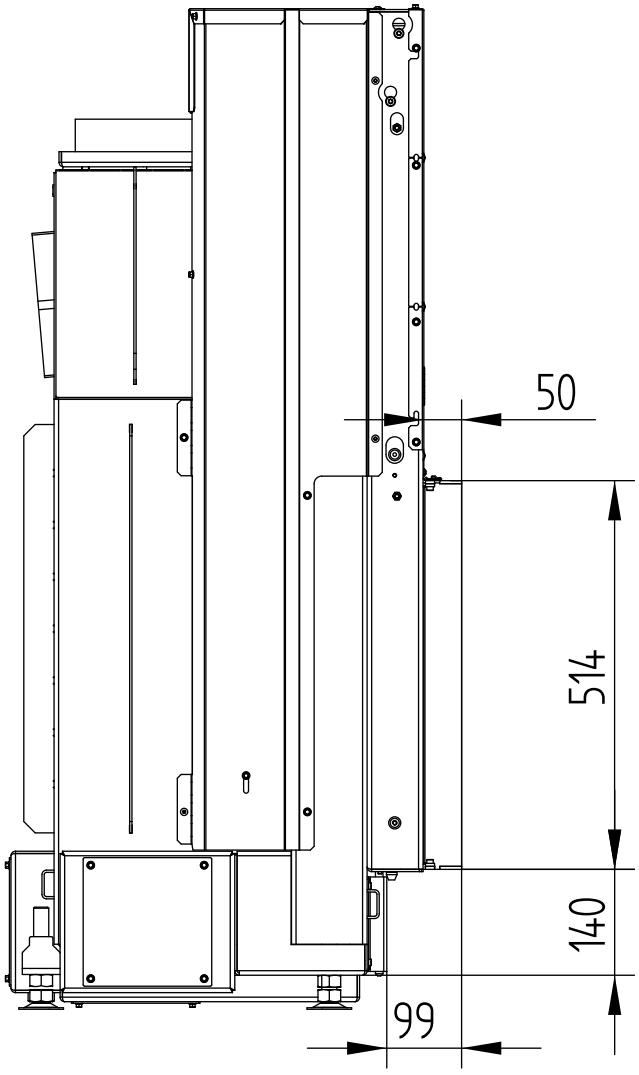

HAKA **150/51h**

BUILD-ON FRAME 4-SIDED, 50 mm

M 1 : 10

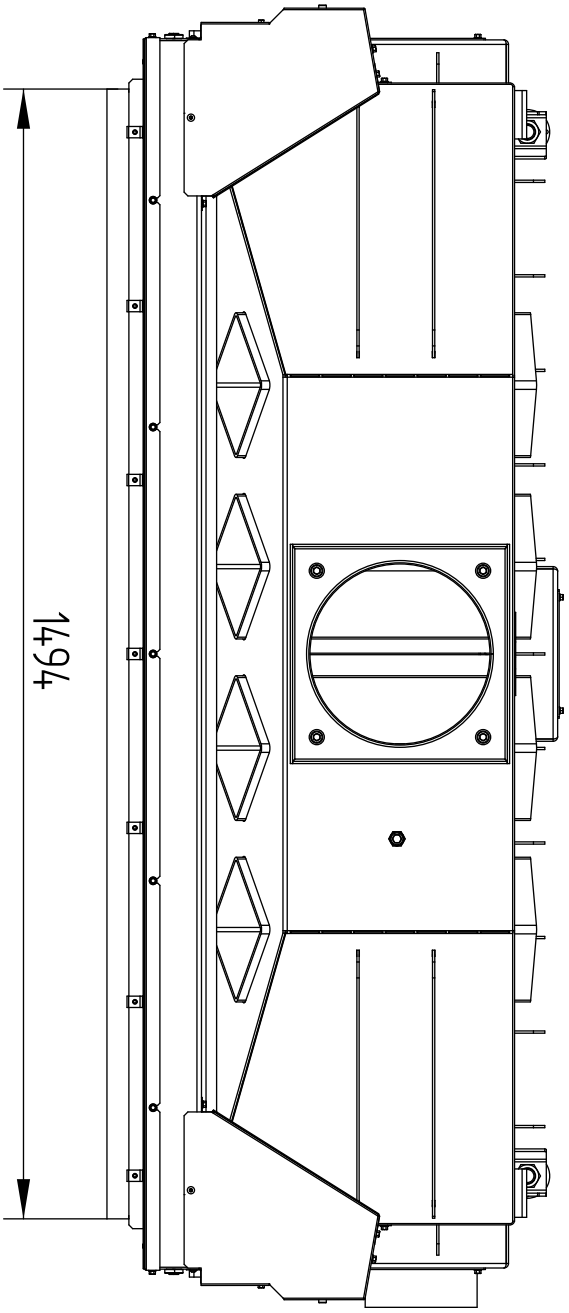

HAKA **150/51h**

Technical data
Version **01/2018**

BUILD-ON FRAME 4-SIDED, 80 mm

M 1 : 10

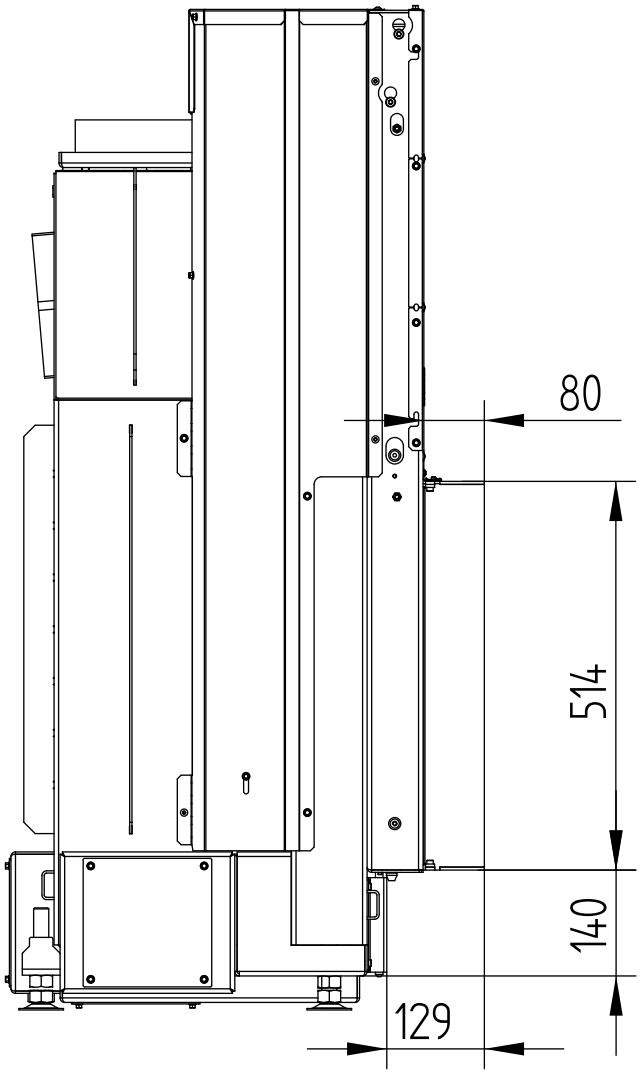

Hoxter gmbh I Hersbrucker Straße 23 I 912 44 Reichenschwand I Germany I info@hoxter.de I +49 (0)9151 8659 163
Hoxter a.s. I Jinacovice 509 I 664 34 Jinacovice I Czech Republic I info@hoxter.eu I +420 518 777 701

HAKA **150/51h**

BUILD-ON FRAME 4-SIDED, 80 mm

M 1 : 10

