1553034

S-Paver 3200 LED

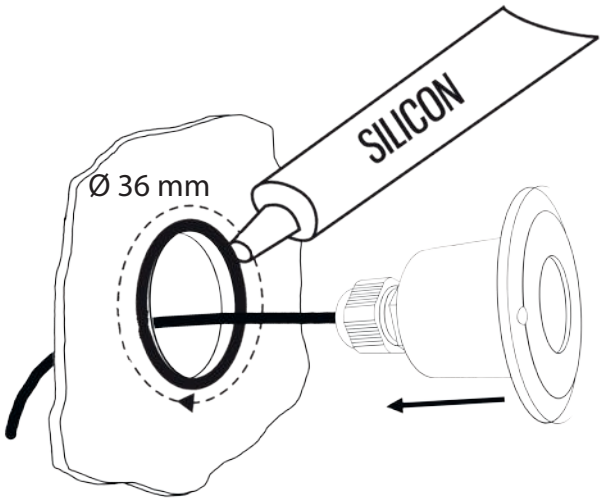

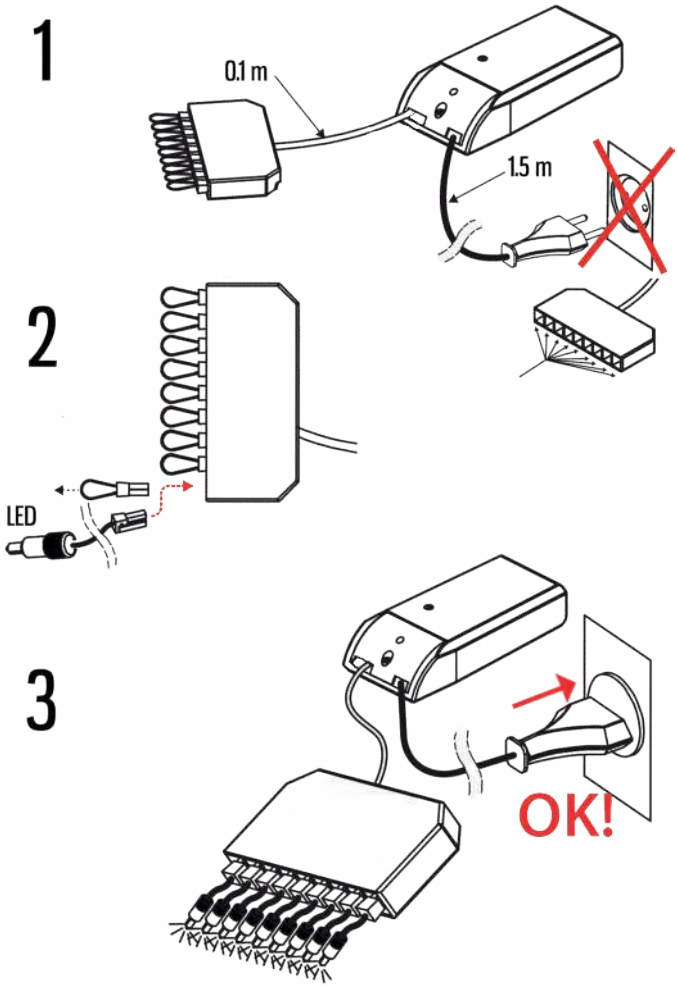

RECOMMENDED TRANSFORMER SETS:

Transformer	Product No.	Dimmer	Min W	Max W	IP
Osram OTe 13/220-240/350 PC	1532283	*	6	9	20
Osram OTe 18/220-240/350 PC	1532284	*	9	17	20
Osram OTe 20/220-240/350 PC	1532266	*	15	18	20
Osram OT 9/220-240/350 DIM	1532268	1 - 10 V	1	7	20

* Leading and Trailing Edge Dimmer.
* Power supply: Ambient temperature 0˚C ... 45˚C

Cariitti Oy
www.cariitti.com

Subject to change.

Cable extension kit. Product No. 1532242

Includes a 5 m cable with a connector to transformer and an extension connector IP 67.

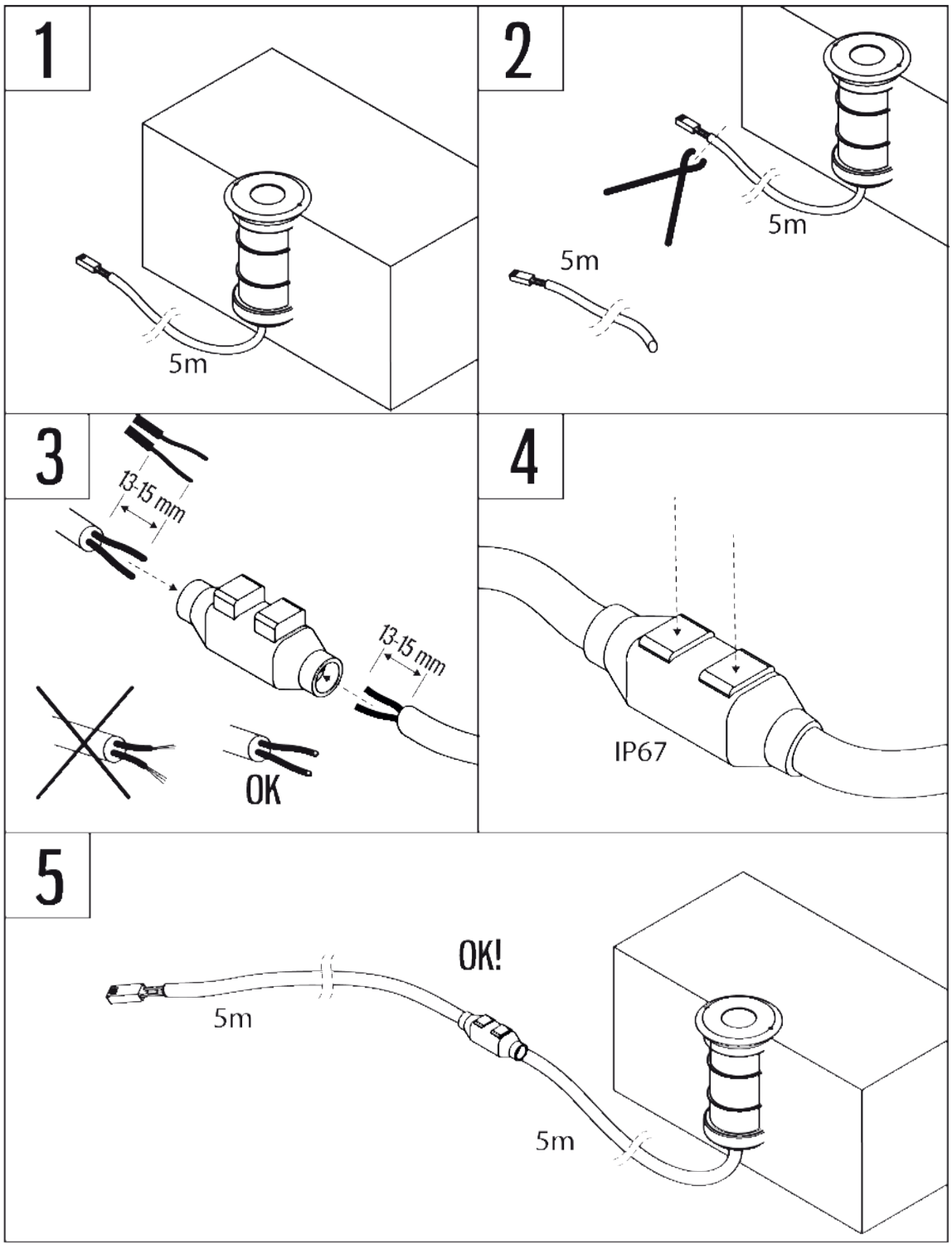

Cariitti Oy
www.cariitti.com

Subject to change.

Installation with parts No. 1553020 and 1553021

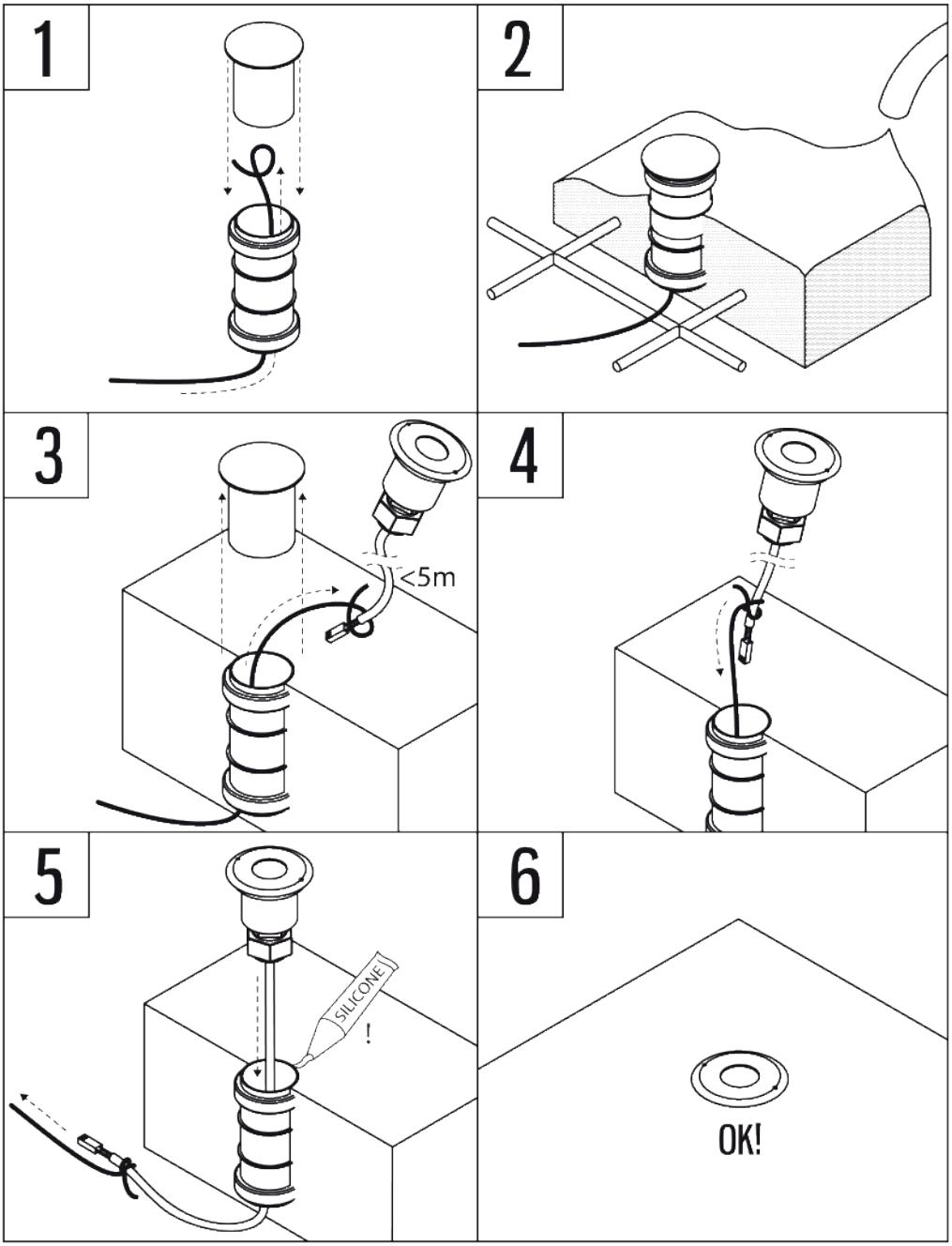

Cariitti Oy
www.cariitti.com

Subject to change.