FIREPLACE INSERTS FROM BRUNNER



# Architektur-Kamin
# Tunnel 38/86

State: 2018-04-25




BRUNNER®
made in germany.

# Dimension sheets - Architektur-Kamin Tunnel 38/86

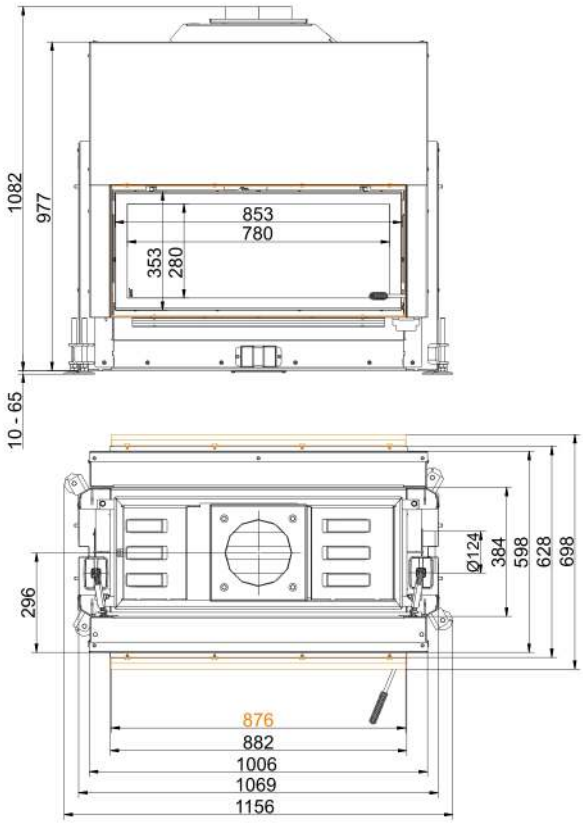


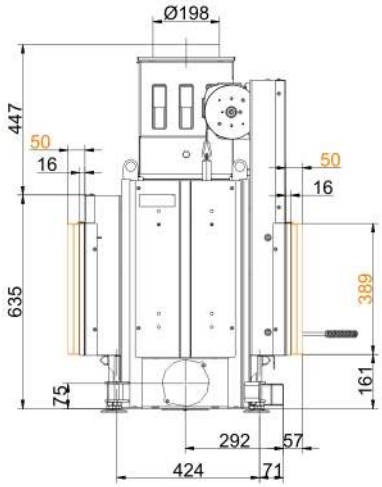


**… /tilting door with mounting frame 50 mm**

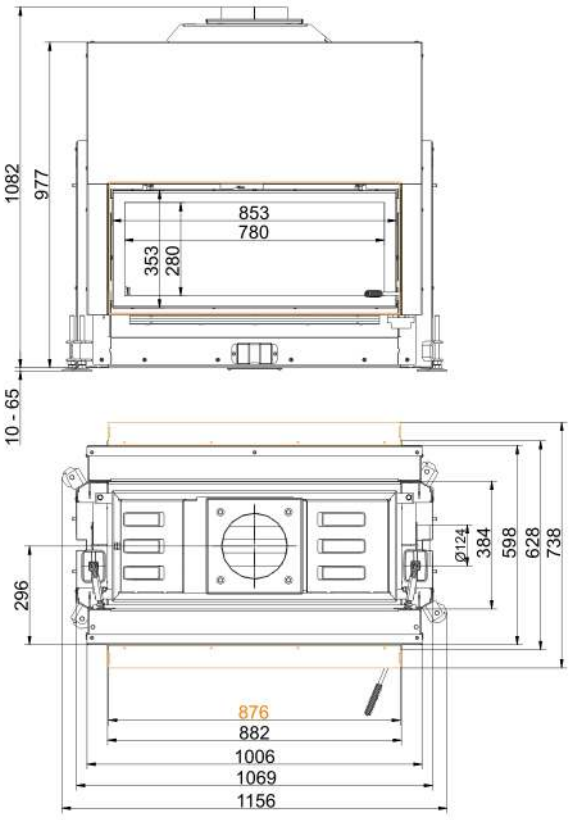


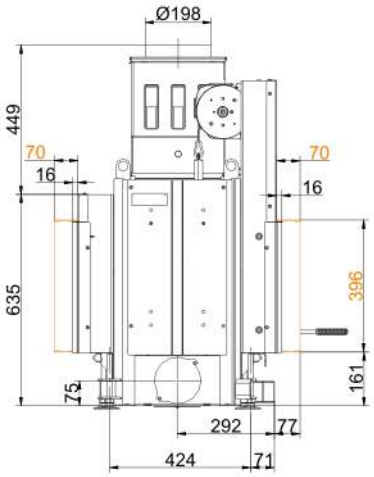


**… /tilting door with mounting frame 70 mm**

State: 2018-04-25

# Dimension sheets - Architektur-Kamin Tunnel 38/86

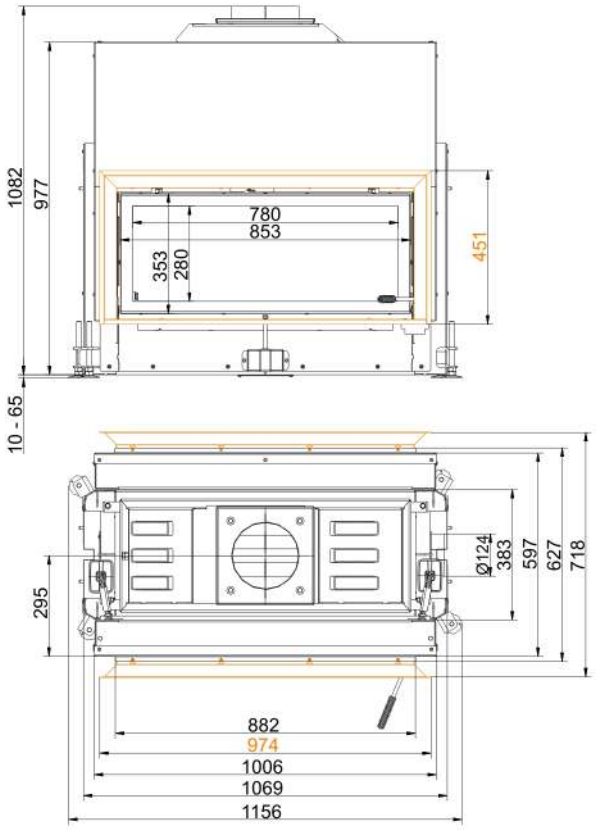


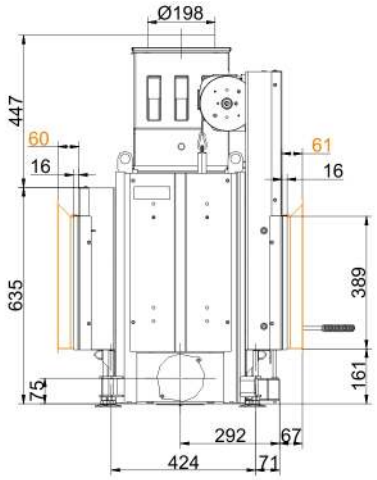


**… /tilting door with door frame**

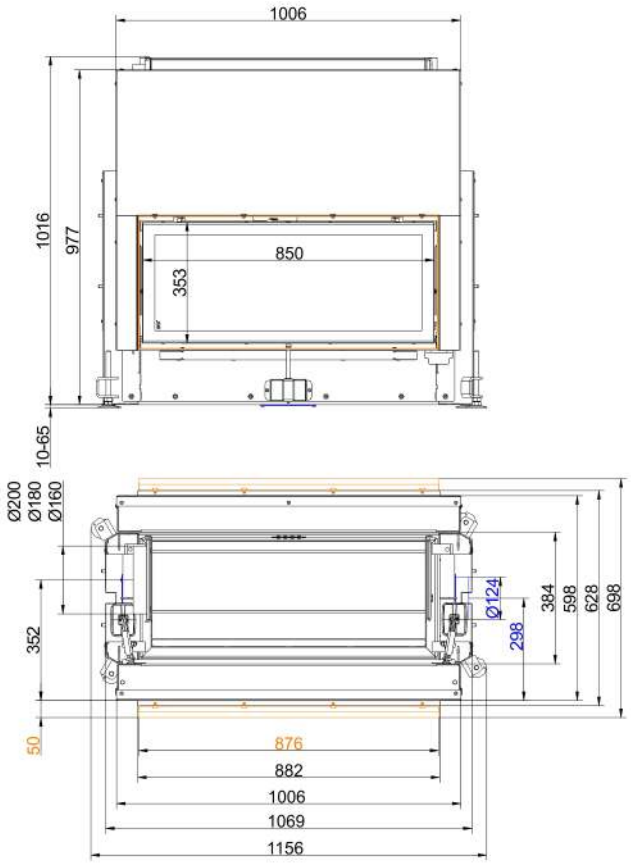


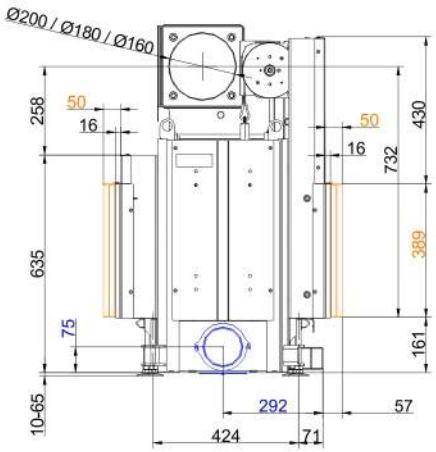


**… with mounting frame 50 mm**

State: 2018-04-25

# Dimension sheets - Architektur-Kamin Tunnel 38/86

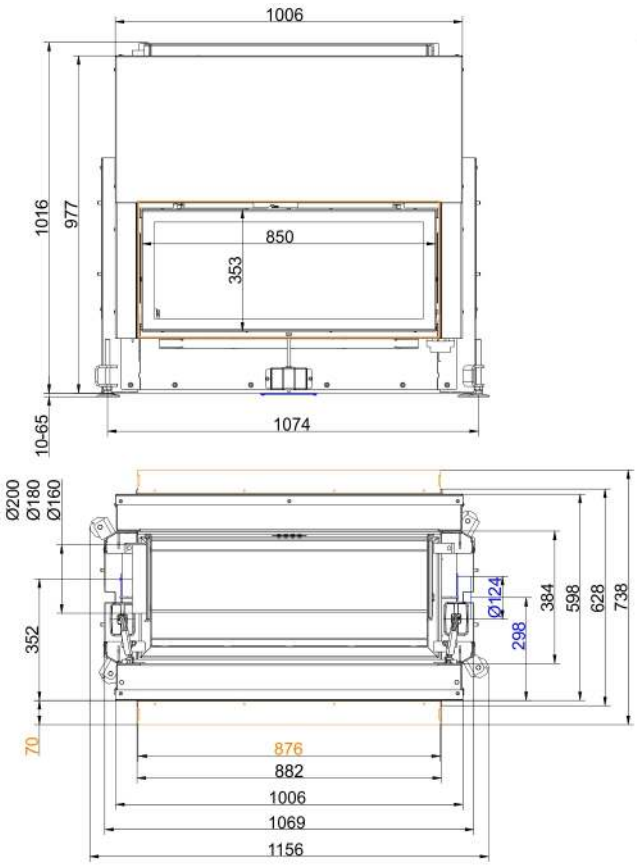


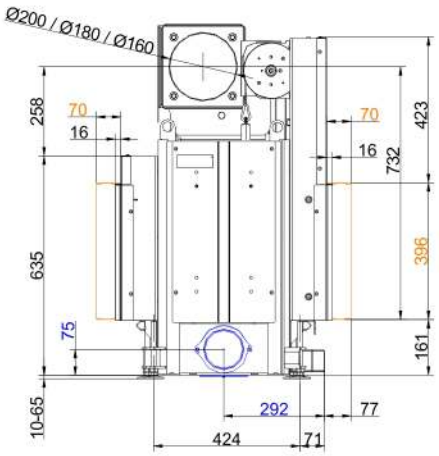


**… with mounting frame 70 mm**

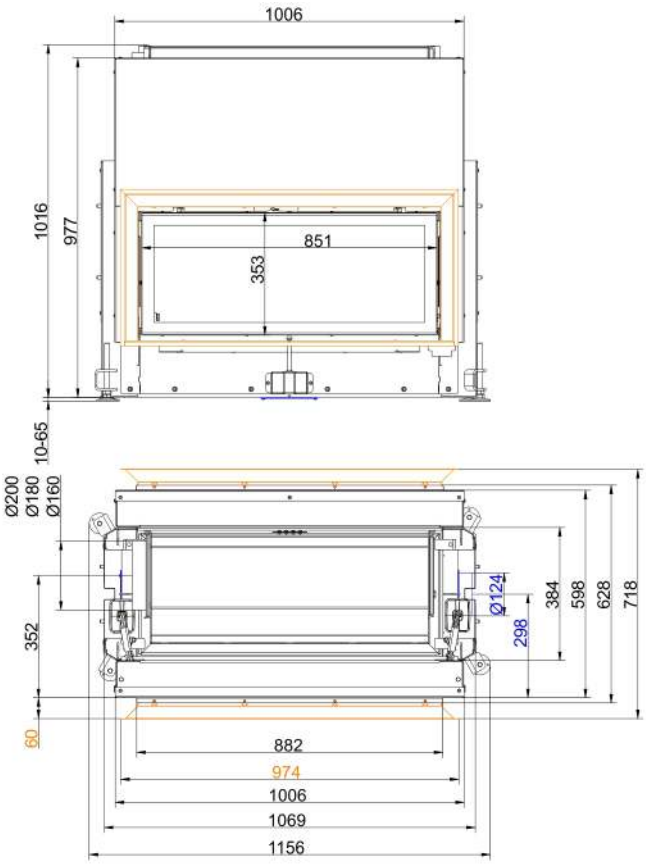


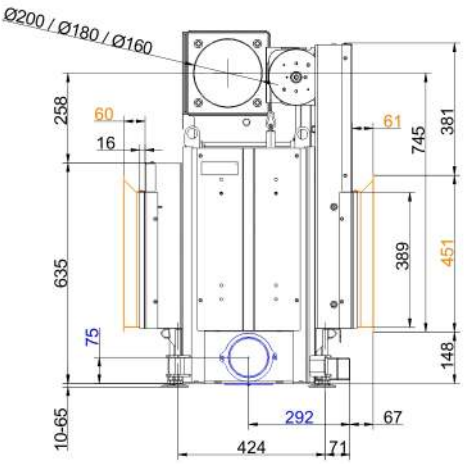


**… with door frame**

State: 2018-04-25

# Dimension sheets - Architektur-Kamin Tunnel 38/86

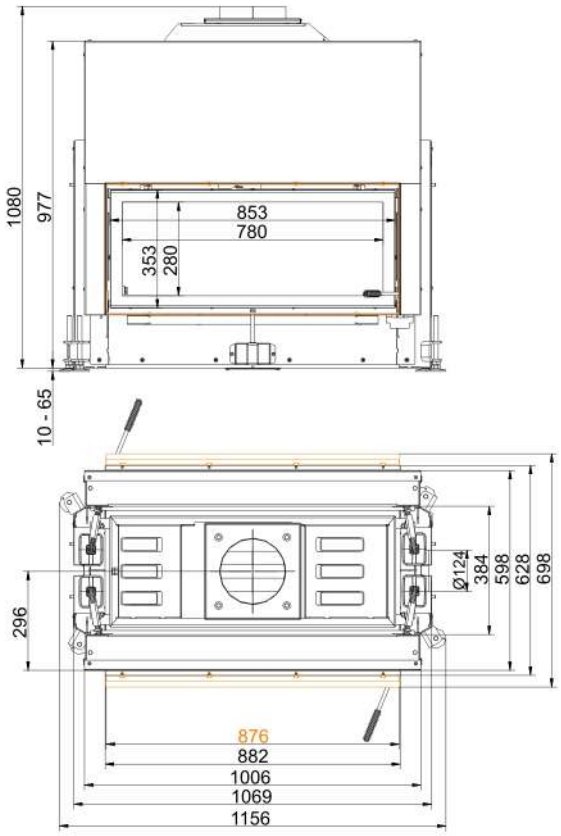


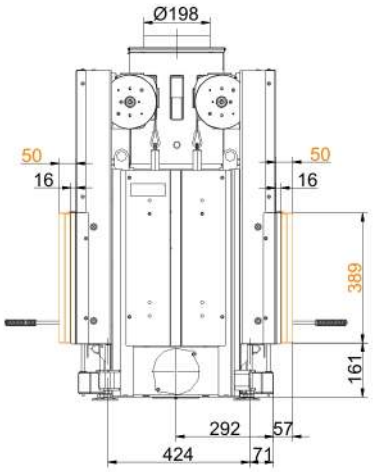


**… with mounting frame 50 mm**

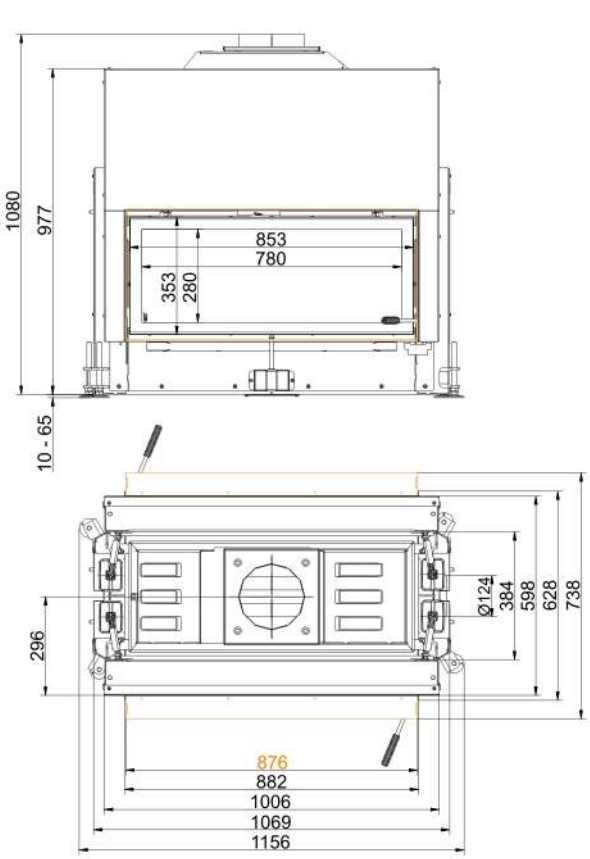


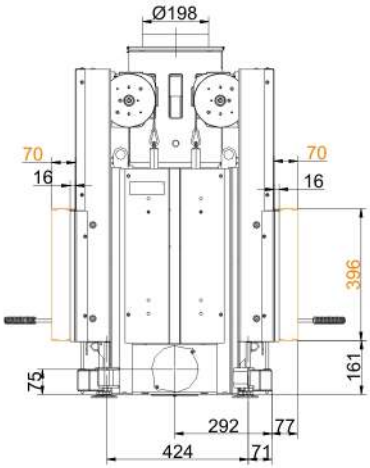


**… with mounting frame 70 mm**

State: 2018-04-25

# Dimension sheets - Architektur-Kamin Tunnel 38/86

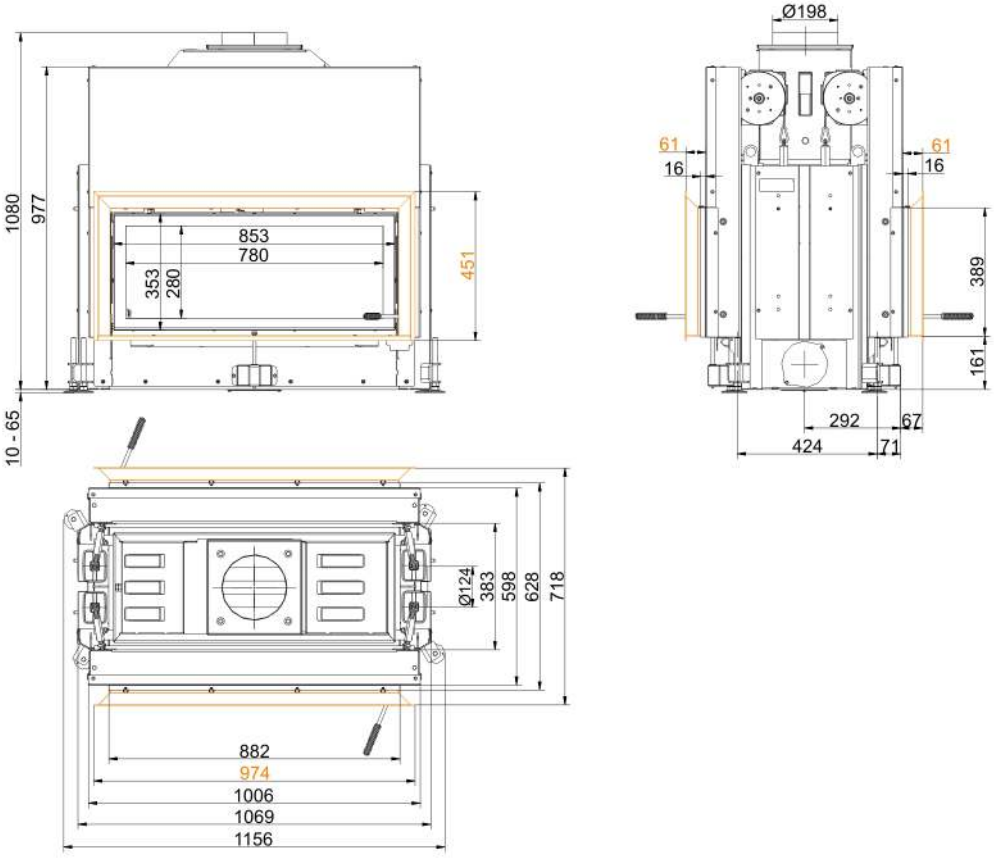


**… with door frame**

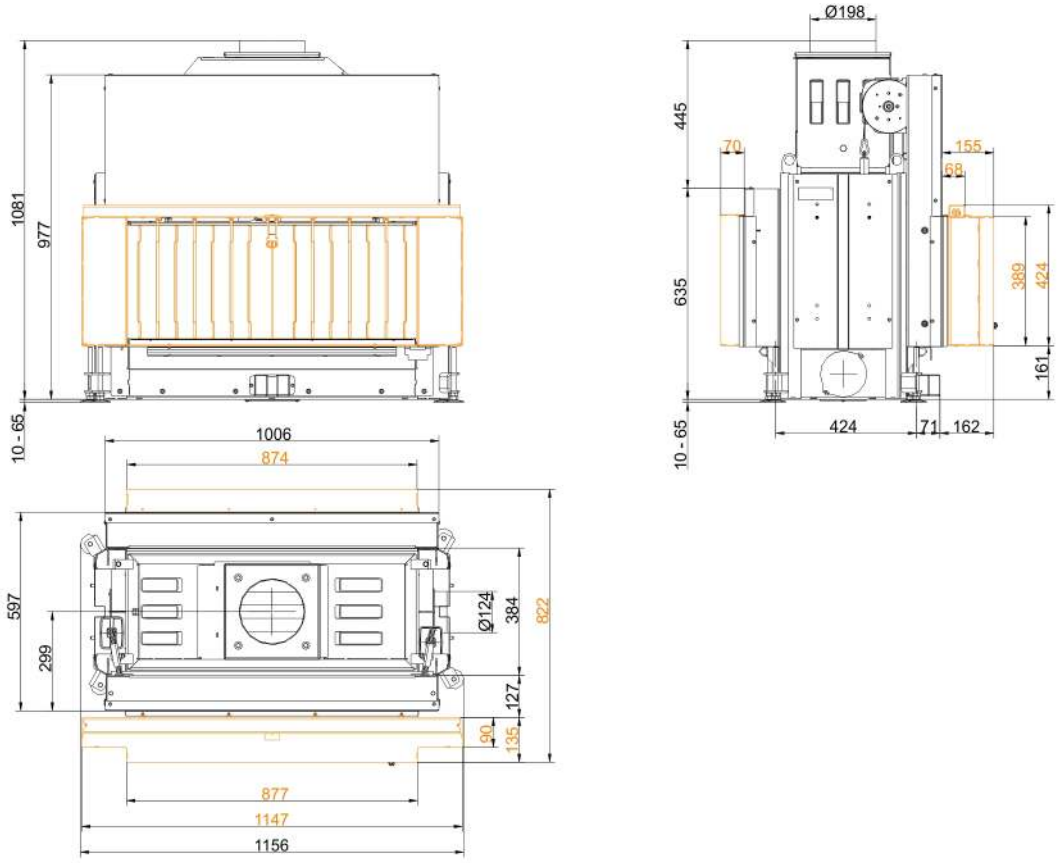


**… with heatSTOP®**

We suggest for CAD planing Palette CAD. Permanent updated drawings: www.brunner.de
Frames / front versions are marked colored.

State: 2018-04-25

# Planning and installation - Architektur-Kamin Tunnel 38/86

| | | | |
|---|---|---|---|
| Tested according to | | EN 13229 W | EN 13229 W |
| Values measured at | | Rated capacity | Open [1] |
| Suitable for all construction types according to rules | | OK | OK |
| EEI | | 102.8 | 102.8 |
| **Data for functional demonstration** | | | |
| Rated heat power | kW | 10 | - |
| Fire wood volume | kg/h | 3.1 | 3.1 |
| Combustion performance | kW | 13.5 | 13.5 |
| Flue gas mass flow | g/s | 11 | 75 |
| Flue gas temperature after: | | | |
| attached steel smoke hood | °C | 220 | 135 |
| Necessary supply pressure | Pa | 12 | 6 |
| Combustion air consumption | $m^3/h$ | 30 | 200 |
| Combustion air connection Ø | mm | 125 | - |
| **Heat distribution** | | | |
| Insert / heat accumulator | % | 50 / - | - |
| Glass pane (single / double) | % | 50 / - | - |
| **Cross-section of gratings [2]** | | | |
| Convection air | $cm^2$ | 700 / 100 / - | - |
| Supply air | $cm^2$ | 700 / 100 / - | - |
| **Minimal oven surface for closed construction type** | | | |
| Heat dissipating surface | $m^2$ | 3 | - |
| **Min. distances of fireplace without / with convection casing** | | | |
| to insulation layer | cm | 8 | 8 |
| to mounting floor | cm | 2 | 2 |
| **Thermal insulation without / with air gratings** | | | |
| Mounting wall | cm | 18 / 14 | 18 / 14 |
| Floor | cm | 2 | 2 |
| Ceiling | cm | 28 / 20 | 28 / 20 |
| Brick lining for combustible wall | cm | 10 | 10 |
| **Weight** | | | |
| Fireplace / combustion chamber | kg | 200 / 51 / - | - |
| **Meets requirement/limit values for:** | | | |
| Germany/ Austria / Suisse / Norway | | 1.BImSchV (Stufe 2) / 15a BVG (2015) / LRV / - | |

1) Limited to one side opening
2) for fireplace inserts / flue gas pipe / metallic reheating surface

Ulrich Brunner GmbH
Zellhuber Ring 17 - 18
D-84307 Eggenfeldern
Telefonat: +49 / (0)87 21 / 7 71-0
Telefax: +49 / (0)87 21 / 7 71-100
info@brunner.de | www.brunner.de

BRUNNER®
made in germany.