TILE STOVE INSERTS FROM BRUNNER



HKD 5.1

State: 2018-05-17



BRUNNER®
made in germany.

Dimension sheets - HKD 5.1

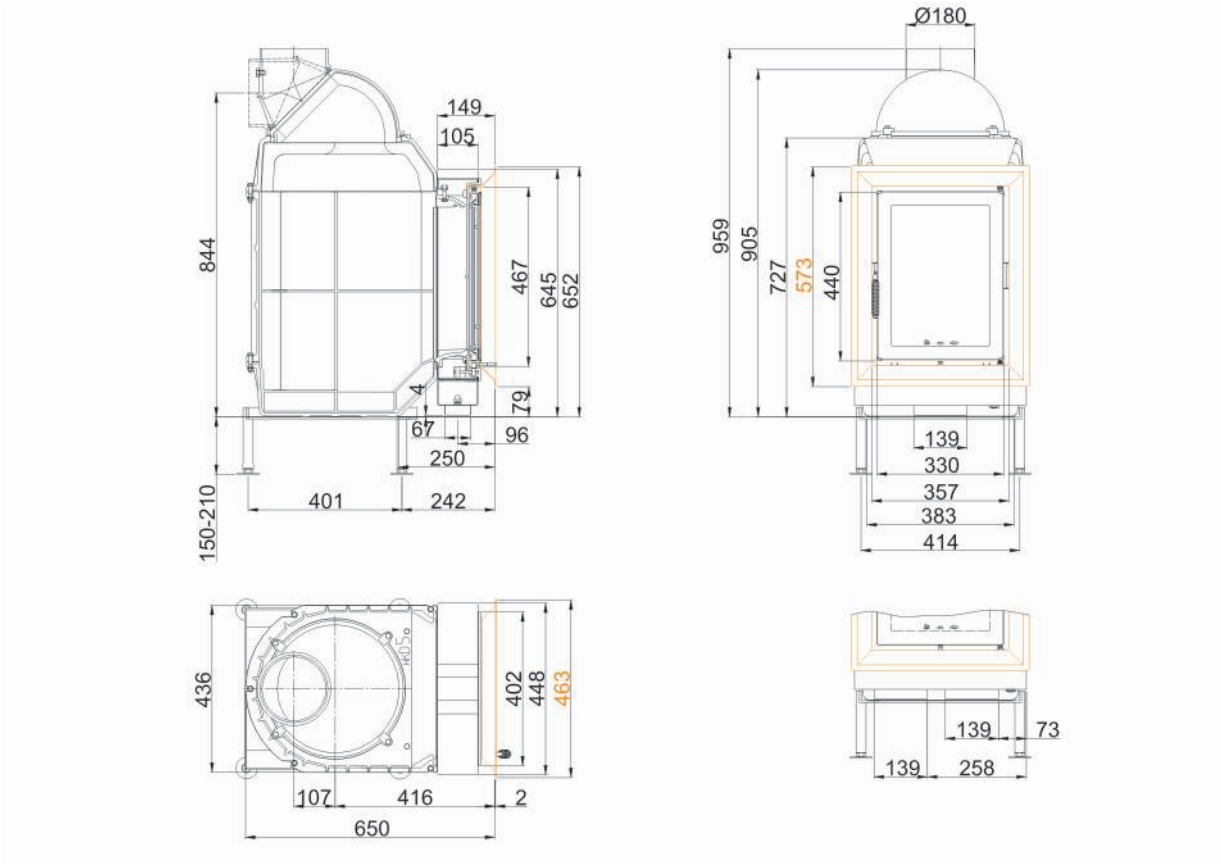

… with steel door frame

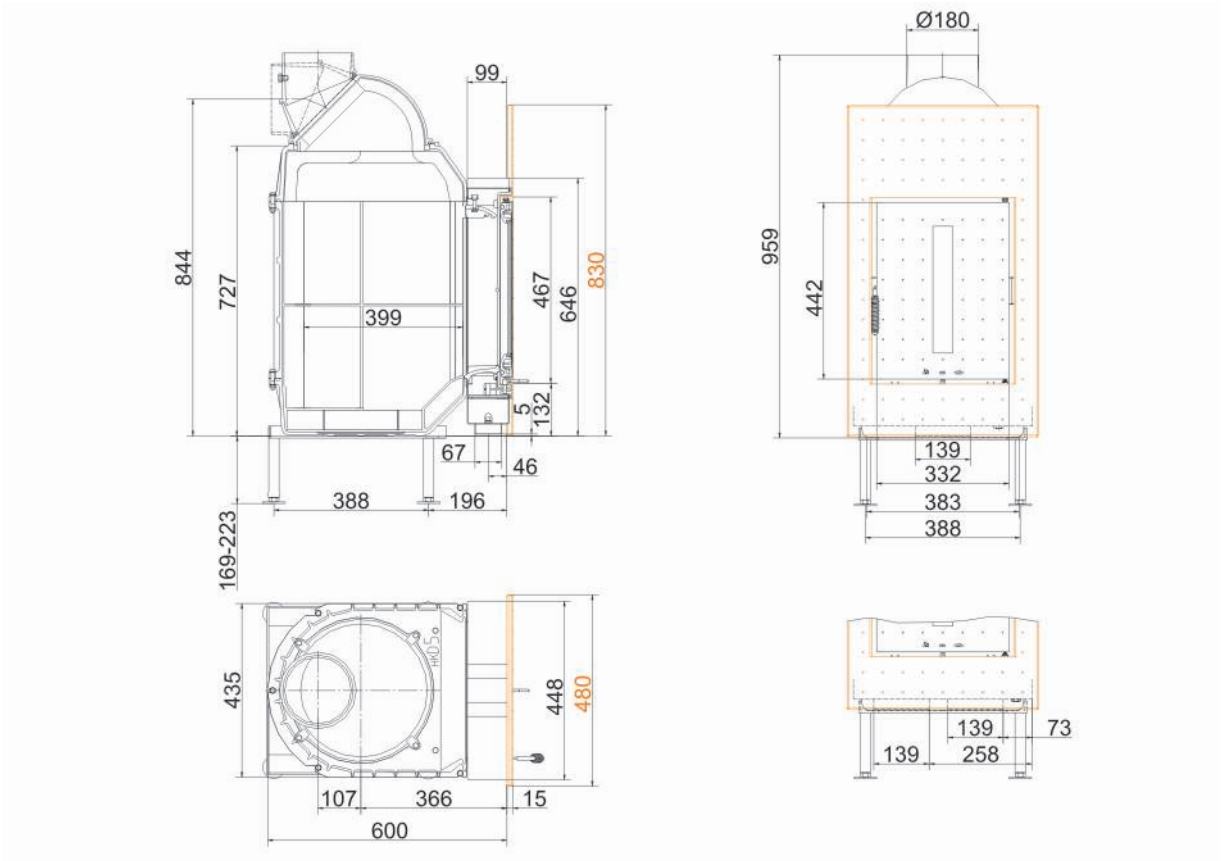

… with steel front plate

Dimension sheets - HKD 5.1

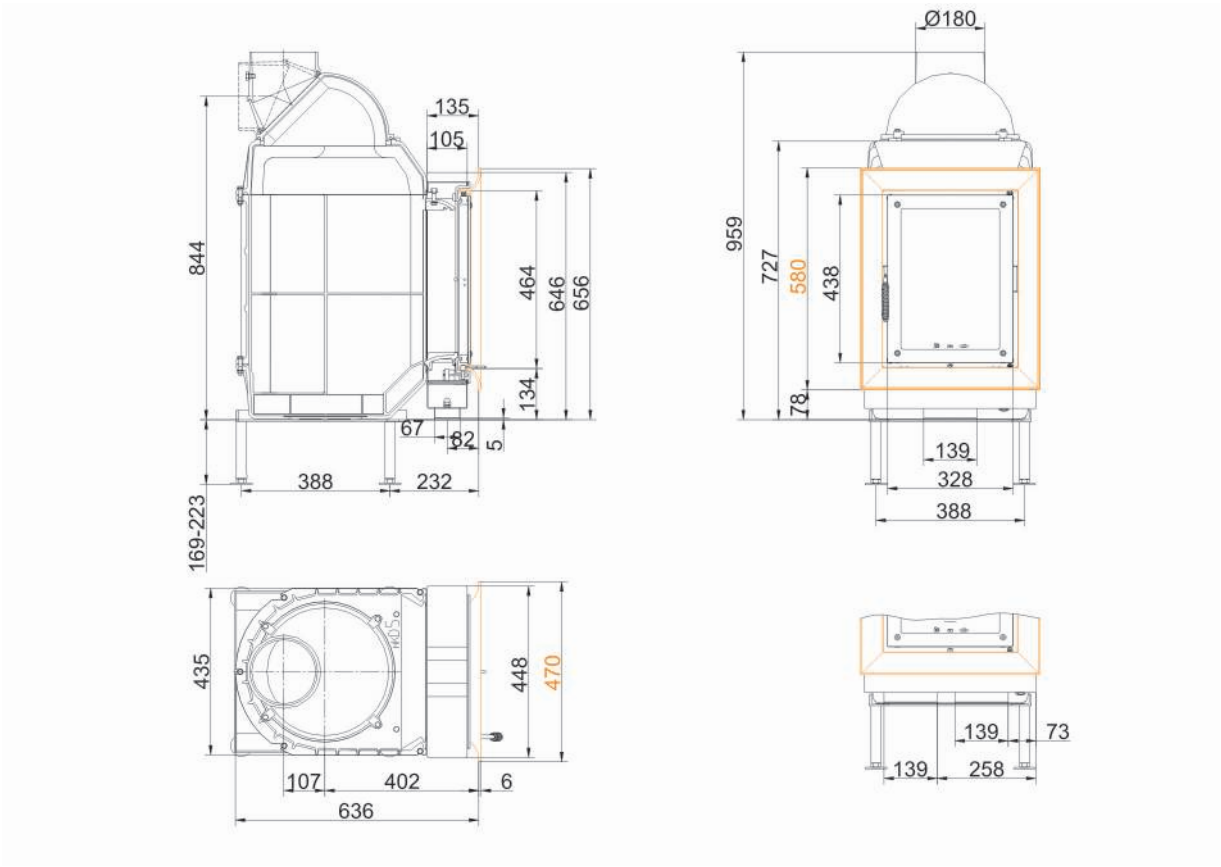

… with cast iron frame

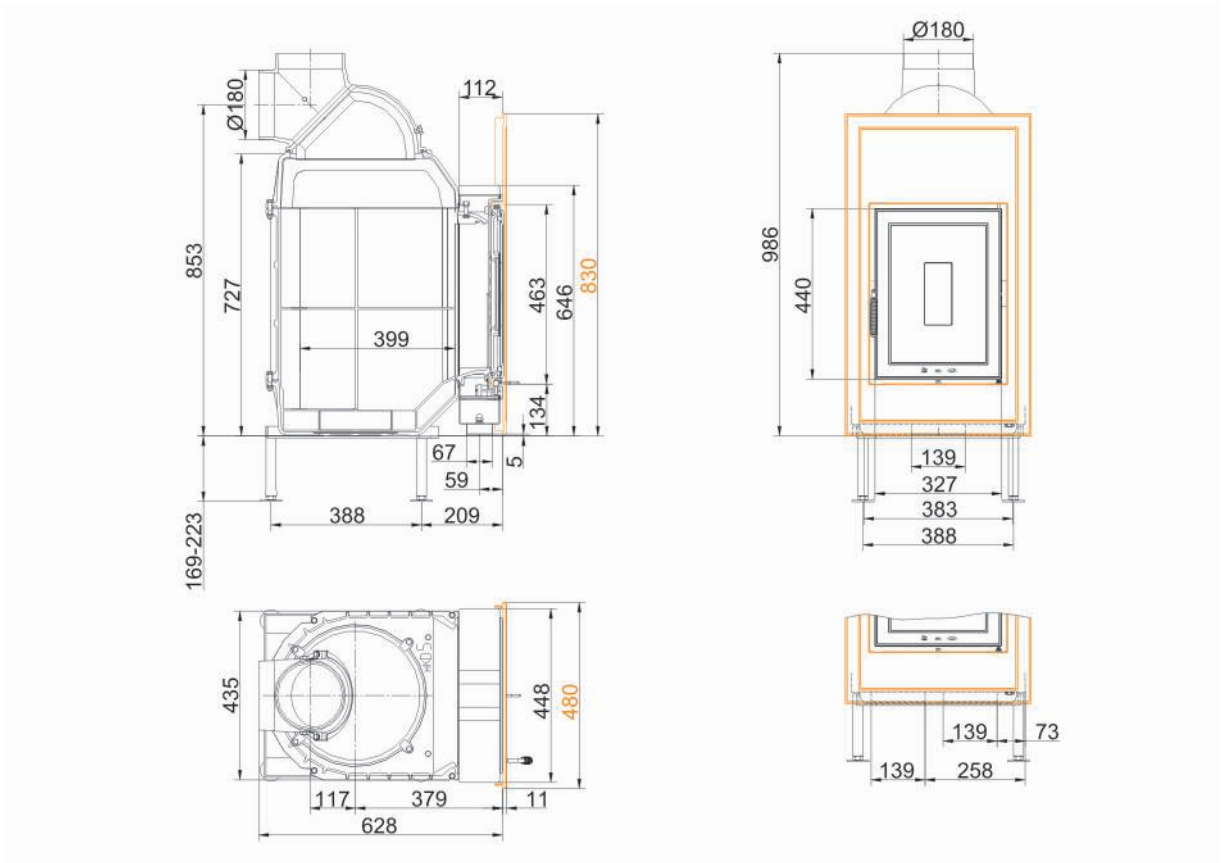

… with cast iron front plate

State: 2018-05-17

Dimension sheets - HKD 5.1

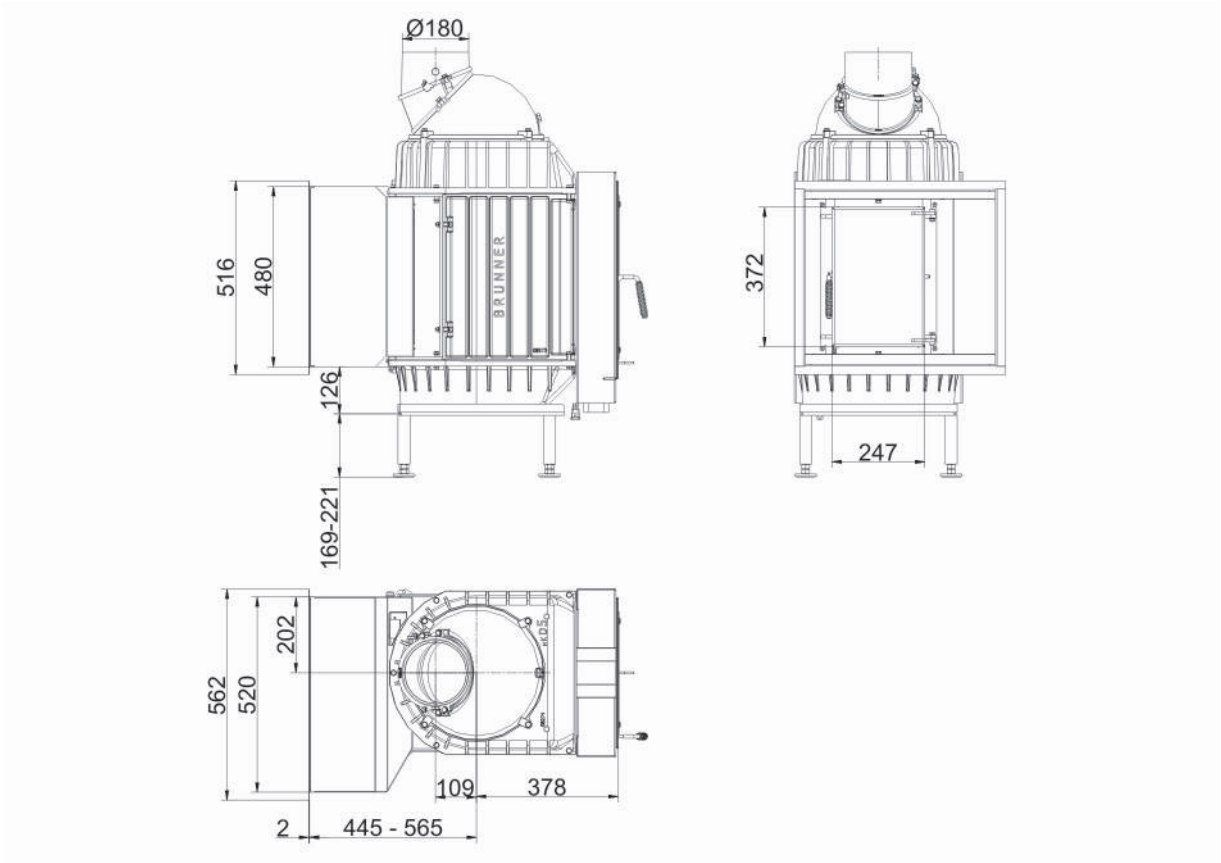

… with additional fire door

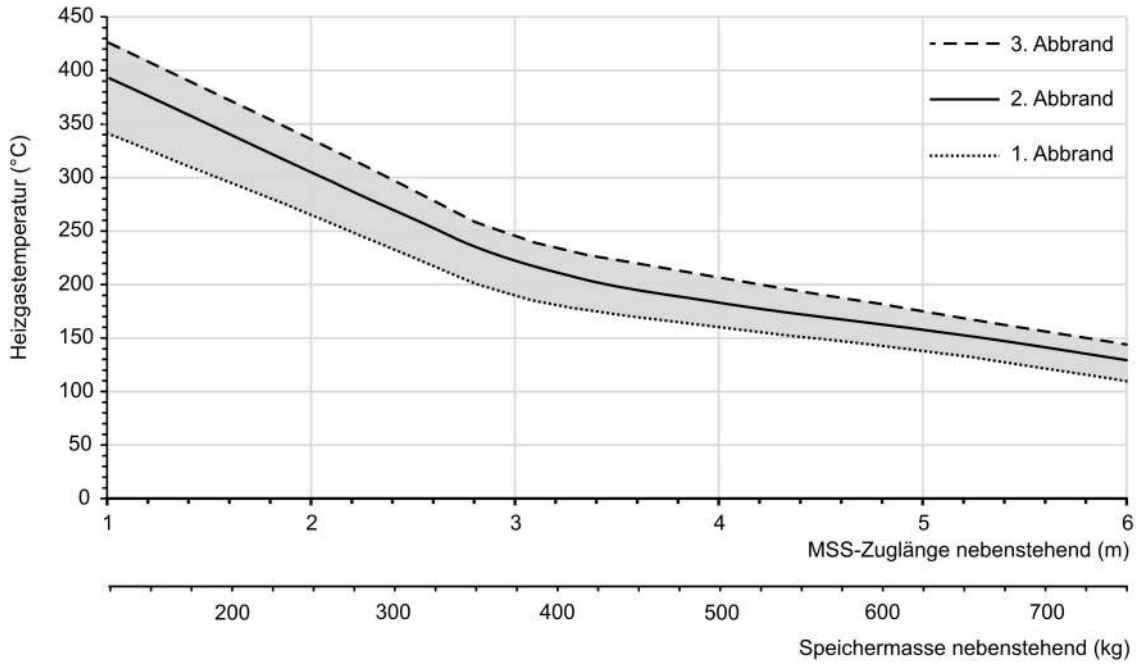

Design characteristics for adjacent storage mass

We suggest for CAD planing Palette CAD. Permanent updated drawings: www.brunner.de
Frames / front versions are marked colored.

State: 2018-05-17

Planning and installation - HKD 5.1

Tested according to		EN 13229 W	EN 13229 WA
Values measured at		Rated capacity	Accumulation
Suitable for all construction types according to rules		OK	OK
EEI		117.3	117.3
Data for functional demonstration			
Rated heat power	kW	10	-
Fire wood volume	kg/h	2.7	6
Combustion performance	kW	12	20
Flue gas mass flow	g/s	12	17
Outlet temperature (before heating surface)	°C	470	580
Flue gas temperature after:			
1 x adjoining cast iron radiator (GNF 8/10)	°C	160	220
7 x accumulation rings (MAS) [1]	°C	210	-
4,5 m ceramic accumulator [2]	°C	-	180
3,1 m accumulation stones (MSS) [2]	°C	-	215
Necessary supply pressure	Pa	13	15
Combustion air consumption	m³/h	35	50
Combustion air connection Ø	mm	125	125
Heat distribution			
Insert / heat accumulator	%	45 / 45	45 / 45
Glass pane (single / double)	%	- / 10	- / 10
Cross-section of gratings [3]			
Convection air	cm²	600 / 250 / 550	600 / 250 / 550
Supply air	cm²	600 / 250 / 550	600 / 250 / 550
Minimal distances of the fireplace			
to insulation layer	cm	8	8
to mounting floor	cm	15	15
Thermal insulation without / with air gratings [4]			
Mounting wall	cm	18 / 14	18 / 14
Floor	cm	0	0
Ceiling	cm	22 / 17	22 / 17
Isolation around the additional door		6	6
Brick lining for combustible wall	cm	10	10
Weight			
Fireplace / combustion chamber	kg	118 / 80	
Meets requirement/limit values for:			
Germany/ Austria / Suisse / Norway		1.BImSchV (Stufe 2) / 15a BVG (2015) / LRV / -	

1) Damper flap recommended
2) Approximate value. Determination according to design characteristics for adjacent storage mass or proof of function provided by calculation
3) for fireplace inserts / flue gas pipe / metallic reheating surface
4) Values determined with upper air sections; stove cladding is heat emitting.

Ulrich Brunner GmbH
Zellhuber Ring 17 - 18
D-84307 Eggenfeldern
Telefonat: +49 / (0)87 21 / 7 71-0
Telefax: +49 / (0)87 21 / 7 71-100
info@brunner.de | www.brunner.de

BRUNNER®
made in germany.