UKA **56/50/56/52h**

A

Technical data
Version **01/2018**

OPERATION WHEN DIRECTLY CONNECTED TO CHIMNEY	
Tested according to	EN 13229
Nominal heat power	11 kW
Efficiency	> 80 %
Consumption of wood	- kg/h
Mass flow of flue gas	- g/s
Average flue gas temperature on the output	 - °C
Heat distribution fireplace insert door glass (single / double)	 - % - / - %
Required chimney pressure	- Pa
Required amount of combustion air	30 m^3/h
Minimum supply air grating cross-section	700 cm^2
Minimum outgoing air grating cross-section	850 cm^2

OPERATION WITH CONNECTED ACCUMULATION MASS	
Load of wood	4,5 kg
Total heat output of the burning chamber	16 kW
Mass flow of flue gas	- g/s
Average flue gas temperature on the output [1] past 2,4 m of ceramic accumulation system KMS 300 [2]	 - °C - °C
Heat distribution fireplace insert door glass (single / double) adjoining accumulation mass	 - % - / - % - %
Required chimney pressure	12 Pa
Minimum radiant area [3]	cca 4,5 m^2
Required amount of combustion air	45 m^3/h

GENERAL TECHNICAL INFORMATION	
Combustion air connection	Ø 150 mm
Total weight / lining weight	ca. 236 / 43 kg
Use in non-ventilated accumulation builds according to craft rules	suitable
Meets values	BImSchV (Stufe2), 15a BVG

1) The Hoxter products are available in the Austrian stove-calculation program for evaluation of firebrick accumulation systems.
2) Only a sample calculation! For accurate results is evaluation of each system in the KMS-calculation program from the Ortner company necessary.
3) Depends on accumulation period and material characteristics and its thickness. Calculated with heat emission of the radiant area ca. 500 W/m^2.hr

Hoxter gmbh I Hersbrucker Straße 23 I 912 44 Reichenschwand I Germany I info@hoxter.de I +49 (0)9151 8659 163
Hoxter a.s. I Jinacovice 509 I 664 34 Jinacovice I Czech Republic I info@hoxter.eu I +420 518 777 701

M 1 : 10

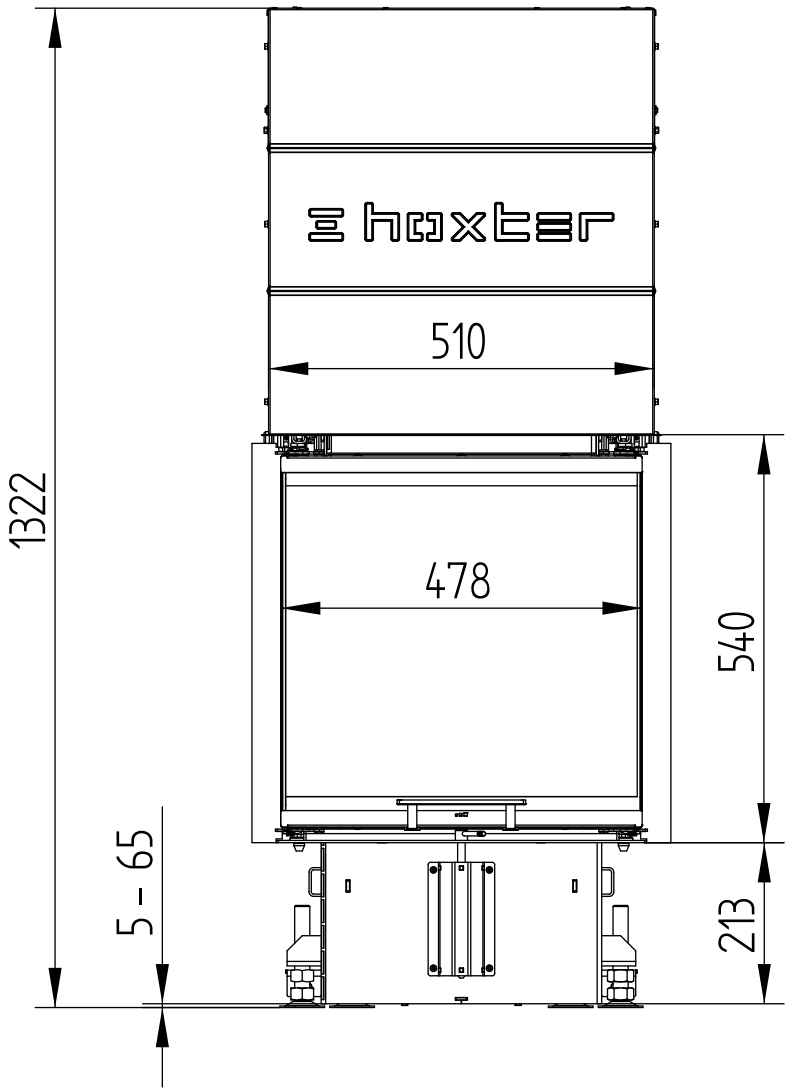

M 1 : 10

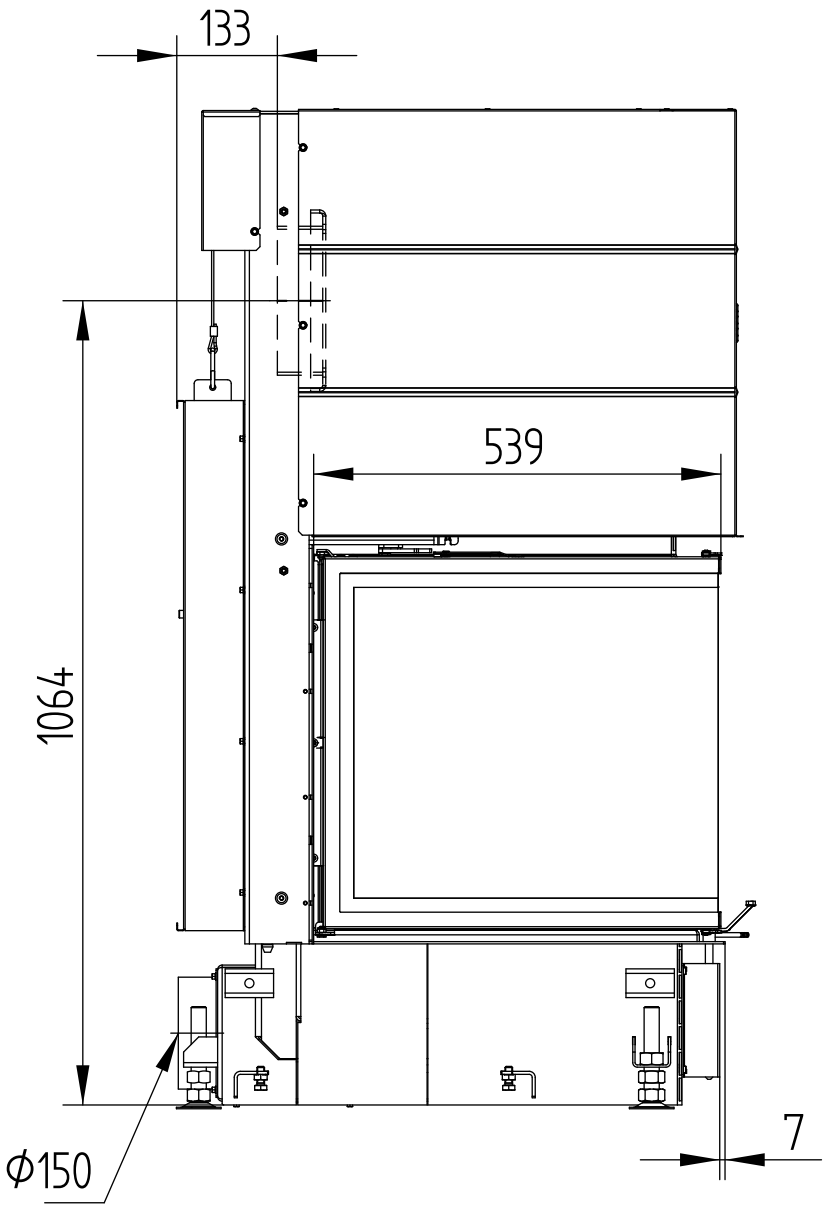

M 1 : 10

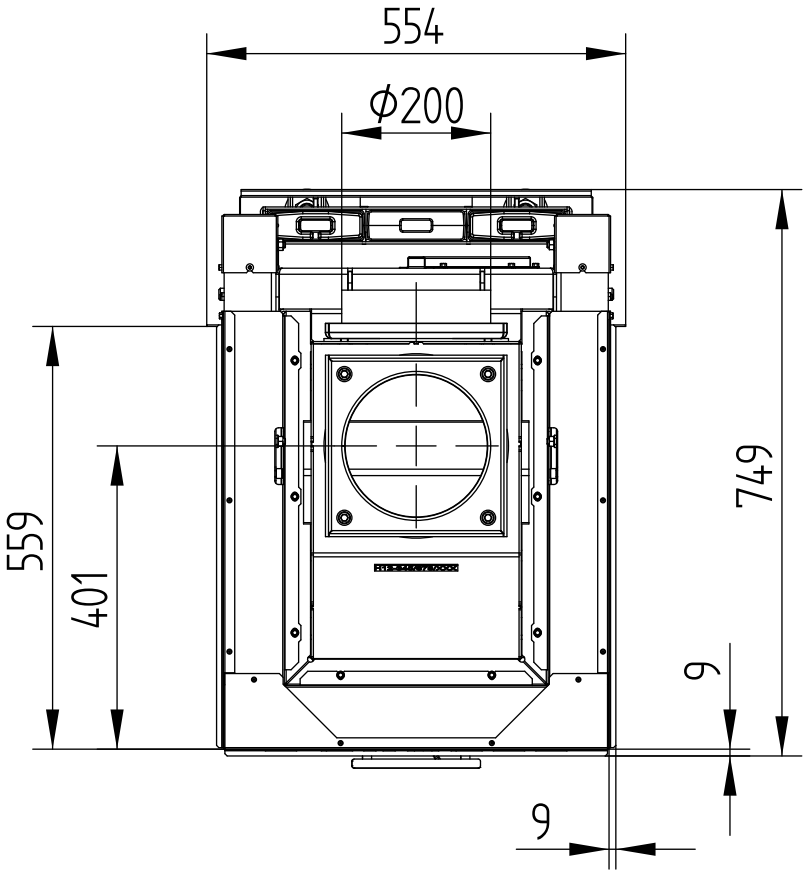

BUILD-ON FRAME 8-SIDED

M 1 : 10

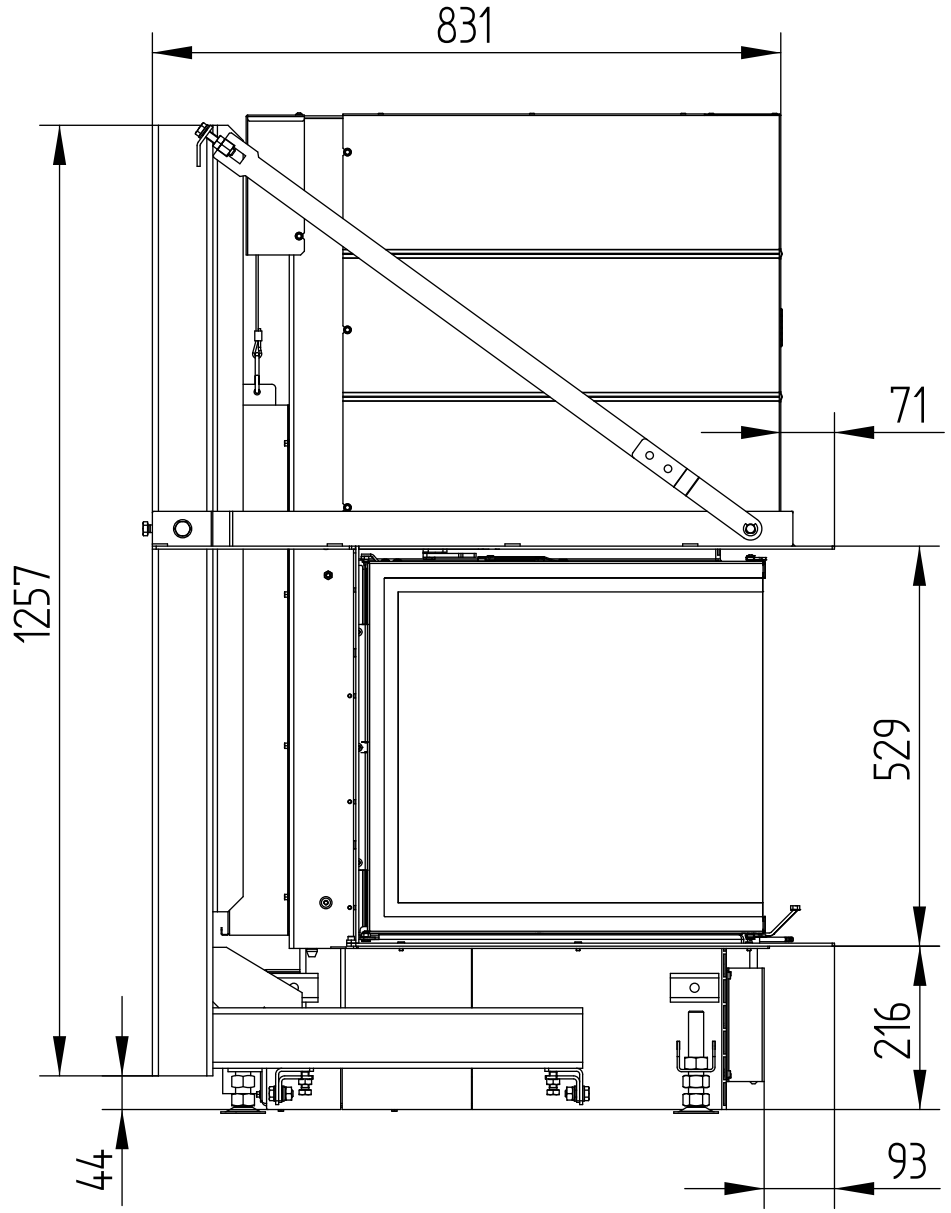

UKA **56/50/56/52h**

Technical data
Version **01/2018**

BUILD-ON FRAME 8-SIDED

M 1 : 10

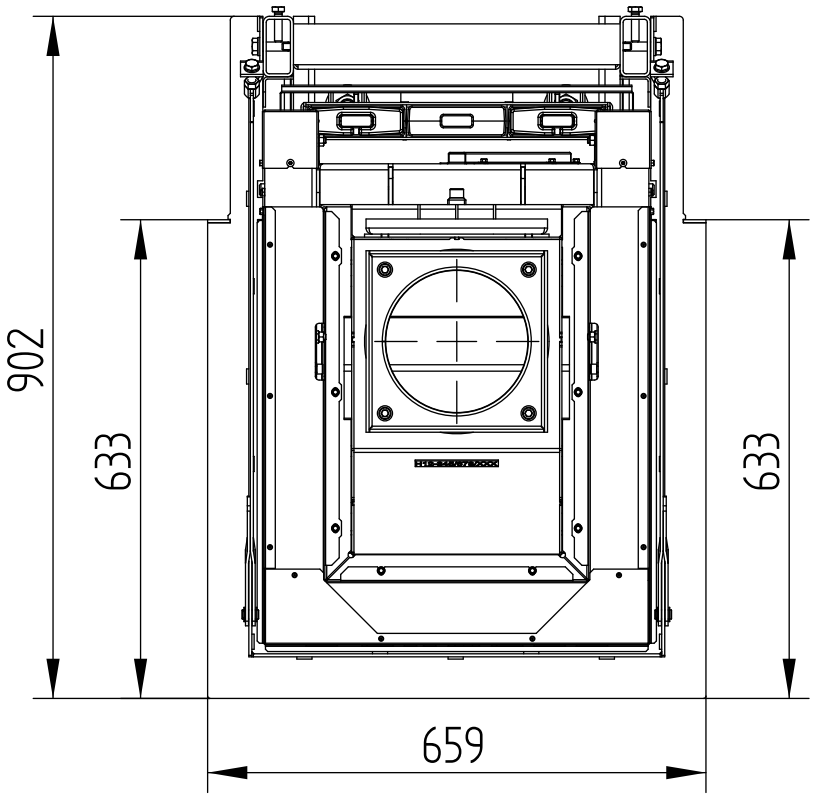

Hoxter gmbh I Hersbrucker Straße 23 I 912 44 Reichenschwand I Germany I info@hoxter.de I +49 (0)9151 8659 163
Hoxter a.s. I Jinacovice 509 I 664 34 Jinacovice I Czech Republic I info@hoxter.eu I +420 518 777 701

BUILD-ON FRAME 5-SIDED

M 1 : 10

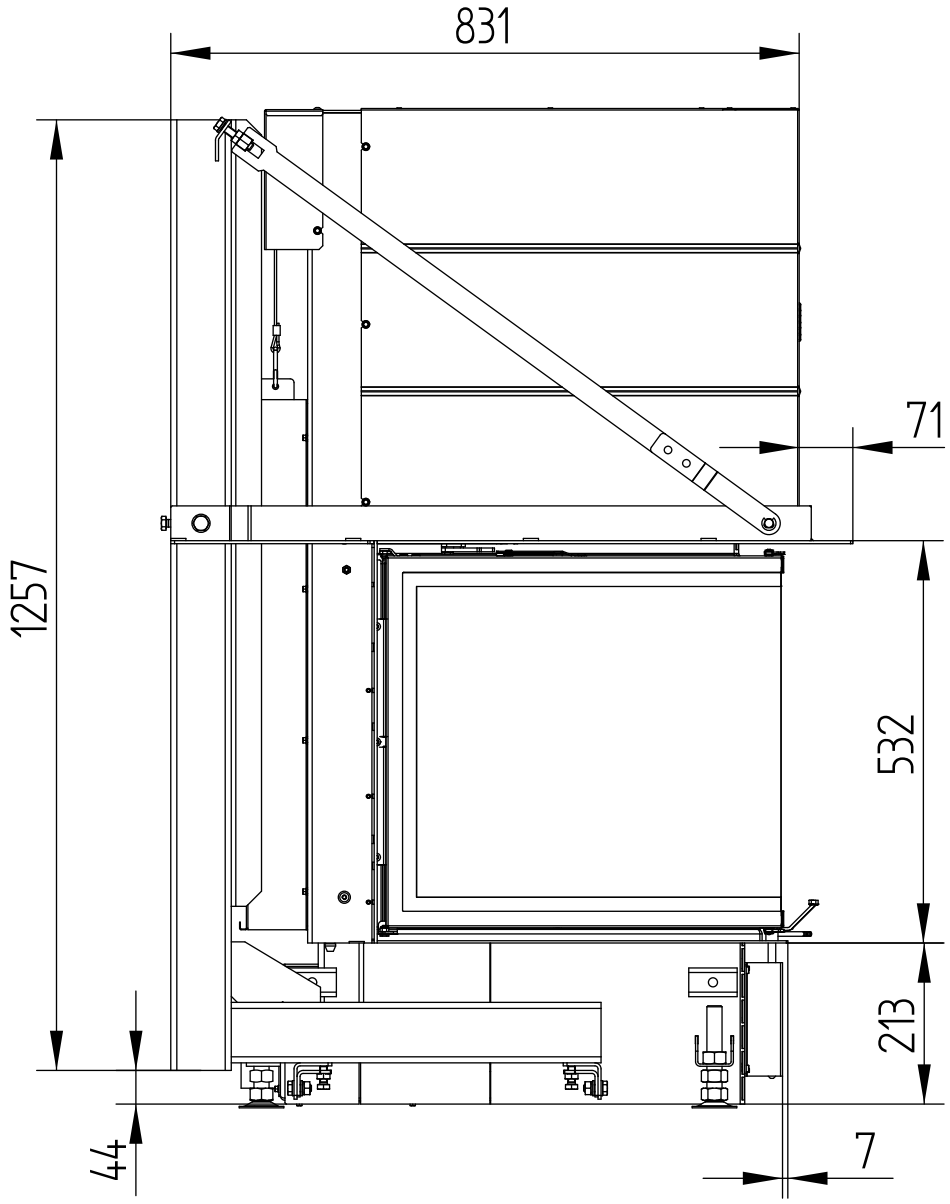

BUILD-ON FRAME 5-SIDED

M 1 : 10

