BRUNNER WATER BOILERS



HKD 2.2 SK Tunnel with cleaning mecha-nism

State: 2018-05-22



BRUNNER®
made in germany.

Dimension sheets - HKD 2.2 SK Tunnel with cleaning mechanism

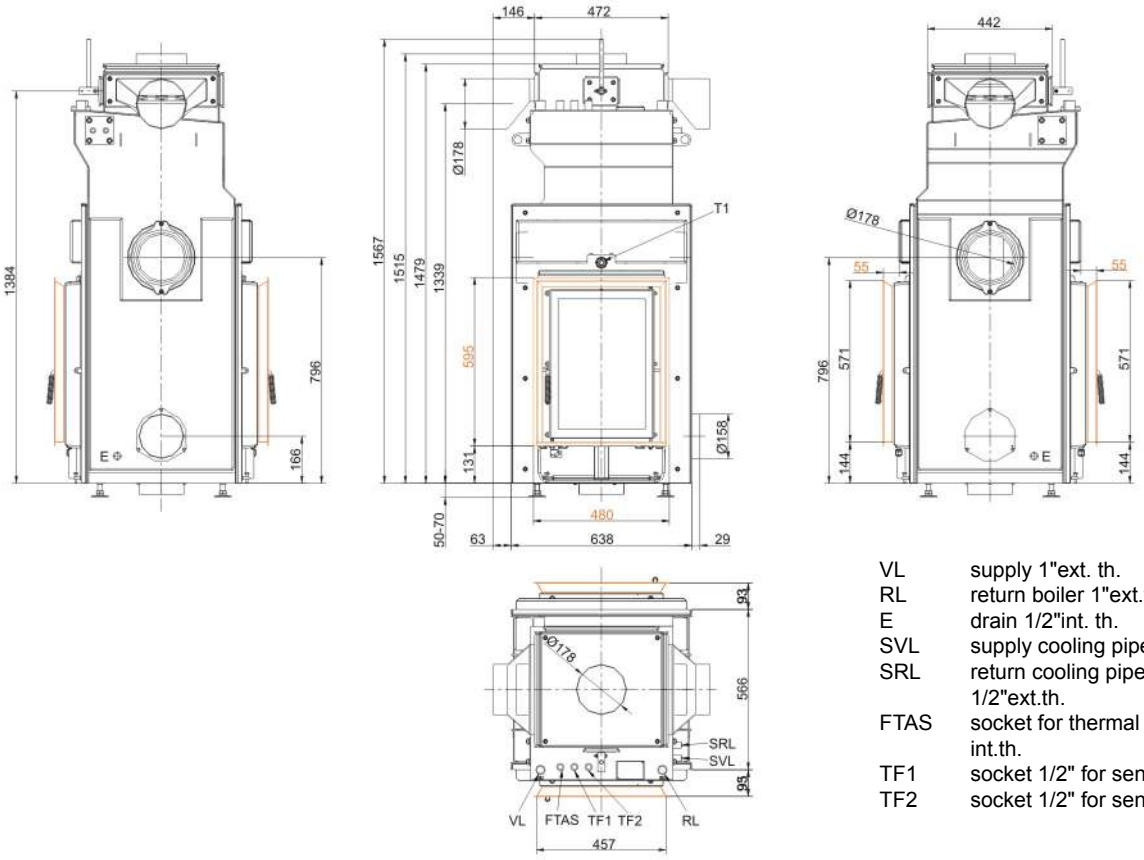

VL	supply 1"ext. th.
RL	return boiler 1"ext.th.
E	drain 1/2"int. th.
SVL	supply cooling pipe outlet ext.th.
SRL	return cooling pipe outlet 1/2"ext.th.
FTAS	socket for thermal safety sensor int.th.
TF1	socket 1/2" for sensor int.th.
TF2	socket 1/2" for sensor int.th.

… flat with door frame

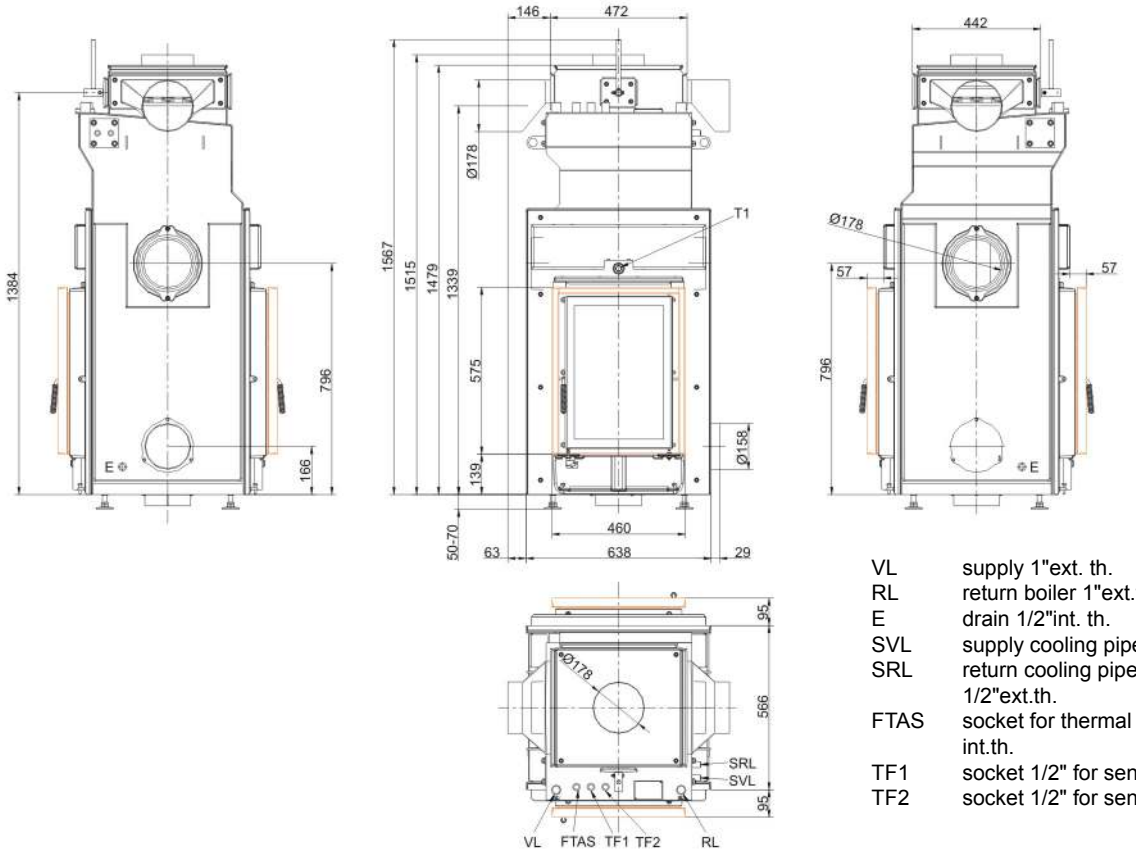

VL	supply 1"ext. th.
RL	return boiler 1"ext.th.
E	drain 1/2"int. th.
SVL	supply cooling pipe outlet ext.th.
SRL	return cooling pipe outlet 1/2"ext.th.
FTAS	socket for thermal safety sensor int.th.
TF1	socket 1/2" for sensor int.th.
TF2	socket 1/2" for sensor int.th.

… flat with mounting frame

State: 2018-05-22

Dimension sheets - HKD 2.2 SK Tunnel with cleaning mechanism

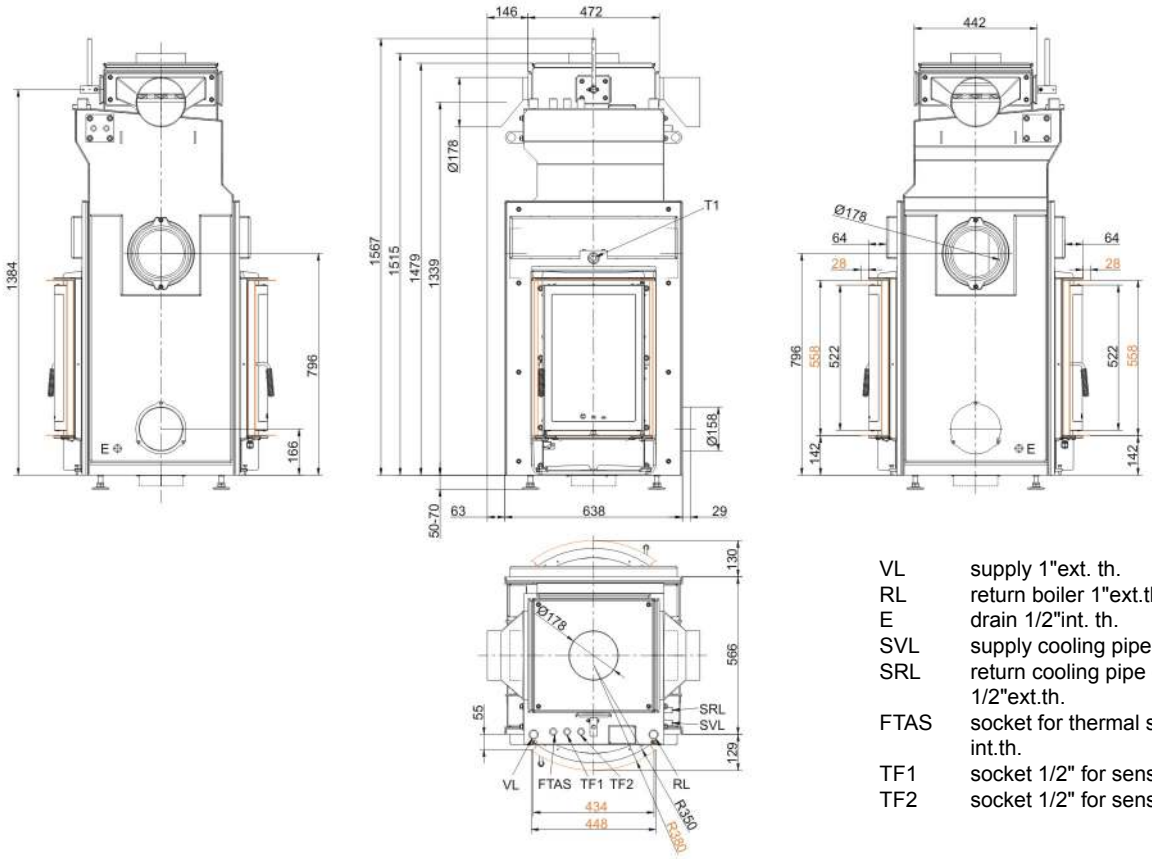

VL	supply 1"ext. th.
RL	return boiler 1"ext.th.
E	drain 1/2"int. th.
SVL	supply cooling pipe outlet ext.th.
SRL	return cooling pipe outlet 1/2"ext.th.
FTAS	socket for thermal safety sensor int.th.
TF1	socket 1/2" for sensor int.th.
TF2	socket 1/2" for sensor int.th.

… round

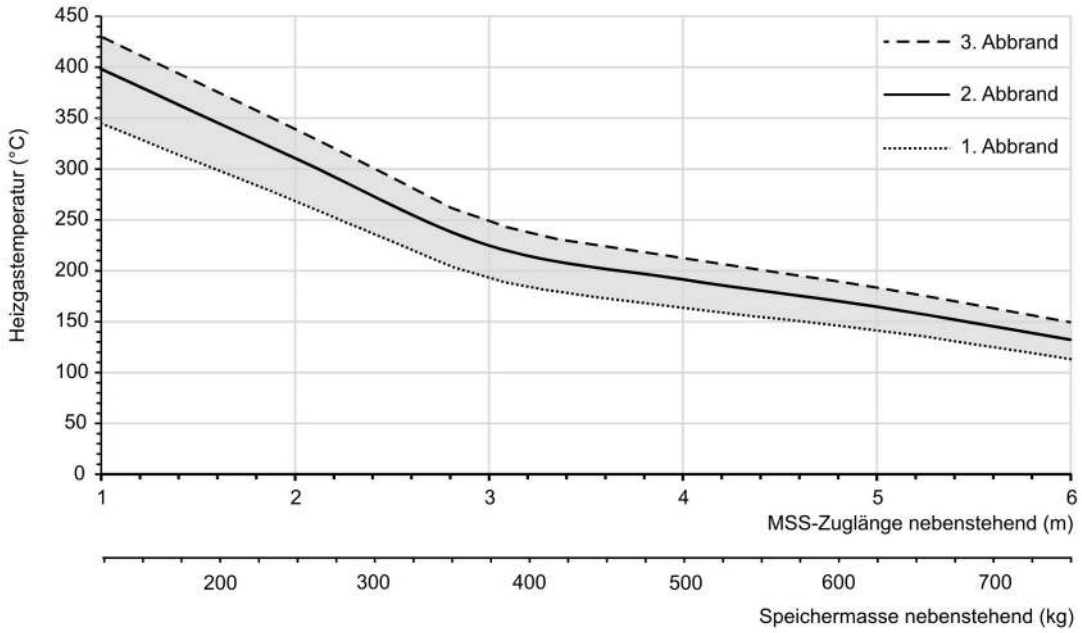

… design characteristics for adjacent storage mass

We suggest for CAD planing Palette CAD. Permanent updated drawings: www.brunner.de
Frames / front versions are marked colored.

State: 2018-05-22

Planning and installation - HKD 2.2 SK Tunnel with cleaning mechanism

Tested according to		EN 13229 W	EN 13229 W
Values measured at		Rated capacity	practical avg.
EEI		120.2	120.2
Data for functional demonstration			
Rated heat power	kW	12	-
Fire wood volume	kg/h	3.4	5
Combustion performance	kW	13.5	17
Flue gas mass flow	g/s	10	21
Outlet temperature (before heating surface)	°C	335	385
Flue gas temperature after:			
1 x adjoining cast iron radiator (GNF 8/10)	°C	125	200
4,9 m ceramic accumulator [1)]	°C	-	180
3,4 m accumulation stones (MSS) [1)]	°C	-	210
boiler	°C	125	210
Necessary supply pressure	Pa	15	15
Combustion air consumption	m^3/h	34	50
Combustion air connection Ø	mm	160	160
Heat distribution			
Insert / heat accumulator	%	5 / 10 - 50	5 / 10 - 50
Glass pane (single / double)	%	30 / 25	30 / 25
Boiler	%	30 - 70	30 - 70
Cross-section of gratings [2)]			
Convection air	cm^2	400 / 200 / 300	400 / 200 / 300
Supply air	cm^2	400 / 200 / 300	400 / 200 / 300
Minimal distances of the fireplace			
to insulation layer	cm	6	6
to mounting floor	cm	6	6
Thermal insulation without / with air gratings [3)]			
Mounting wall	cm	8 / 6	8 / 6
Floor	cm	0	0
Ceiling	cm	10 / 8	10 / 8
Brick lining for combustible wall	cm	10	10
Water boiler data			
Max. operating pressure	bar	3	3
Max. flow temperature	°C	100	100
Water volume	liter	78	78
Connections flow / return	inches	1	1
Weight			
Fireplace / combustion chamber	kg	357 / 64	
Meets requirement/limit values for:			
Germany/ Austria / Suisse / Norway		1.BImSchV (Stufe 2) / 15a BVG (2015) / LRV / -	

1) Approximate value. Determination according to design characteristics for adjacent storage mass or proof of function provided by calculation
2) for fireplace inserts / flue gas pipe / metallic reheating surface
3) Values determined with upper air sections; stove cladding is heat emitting.

Ulrich Brunner GmbH
Zellhuber Ring 17 - 18
D-84307 Eggenfeldern
Telefonat: +49 / (0)87 21 / 7 71-0
Telefax: +49 / (0)87 21 / 7 71-100
info@brunner.de | www.brunner.de

BRUNNER®
made in germany.